McGOEY, HAUSER and EDSALL
CONSULTING ENGINEERS D.P.C.

MARK J. EDSALL, P.E., P.P. (NY, NJ & PA)
MICHAEL W. WEEKS, P.E. (NY, NJ & PA)
MICHAEL J. LAMOREAUX, P.E. (NY, NJ, PA, VT & VA)
MATTHEW J. SICKLER, P.E. (NY & PA)
PATRICK J. HINES

Main Office
33 Airport Center Drive
Suite 202
New Windsor, New York 12553

(845) 567-3100
fax: (845) 567-3232
e-mail: mheny@mhepc.com

Principal Emeritus:
RICHARD D. McGOEY, P.E. (NY & PA)
WILLIAM J. HAUSER, P.E. (NY, NJ & PA)

TOWN OF NEWBURGH
PLANNING BOARD
TECHNICAL REVIEW COMMENTS

PROJECT:	**HV PERSONNEL SUPPORT CENTER OF JEHOVAH'S WITNESSES**
PROJECT NO.:	**14-17**
PROJECT LOCATION:	**SECTION 97, BLOCK 2, LOTS 30.1, 30.22, 33**
PROJECT REP:	**MASER CONSULTING**
REVIEW DATE:	**11 DECEMBER 2014**
MEETING DATE:	**18 DECEMBER 2014**

1. NYSDOT approval for revised emergency access drive should be received along with concurrence for SEQRA Review of the Traffic Report.

2. Plans should be revised to depict emergency access drive along with grading, drainage and access control details. 20 foot emergency access drive is proposed, however, 26 feet may be required due to aerial access requirement based on building height.

3. The plans have been revised to identify that 25 of the 31 spaces within the "courtyard" area of the existing hotel are proposed for transport vans. Recently, the transport vans were noted parked within the former diner parking area.

4. Parking calculation for the detached restaurant identifies "approximately 3,000 square feet of seating". Actual seating area should be depicted to confirm calculation.

5. A lot consolidation plan has been submitted, combining 3 existing parcels into 1.

6. Code Compliance Department's comments regarding 24 foot access drive to structure should be received. Noted access drive is 26 feet in front of covered entrance drop off area.

7. Code Compliance and Jurisdictional Fire Departments comments regarding additional hydrants required on the site should be received. Two hydrants exist on access drive; however, no internal hydrants are identified.

8. Stormwater Pollution Prevention Plan has been received and is under review by this office.

9. Applicants are requested to consider placement of guiderails along northeast rear access drive and parking.

10. Proposed painted islands are identified on the east side of existing hotel structures in 4 locations. Applicant should consider landscaping and curb islands in these locations to reduce run off. In addition, plans should be coordinated depicting these throughout.

11. Construction sequence should depict how access to all required parking for the existing hotel will be maintained during construction activities.

12. Six inch diameter water lines should be evaluated should additional hydrants be required by code or jurisdictional fire department.

13. Applicants are requested to evaluate existing landscaping at the existing hotel site with regard to any proposed improvements.

14. The Applicants are proposing 20 foot high fixture mounting for parking lot lighting which seems appropriate based on the use. Lighting plan has been provided depicting compliance with Town design guidelines and regulations.

15. City of Newburgh Flow Acceptance Letter is required.

Respectfully submitted,

McGoey, Hauser & Edsall
Consulting Engineers, D.P.C.

_____
Patrick J. Hines
Principal

PRELIMINARY SITE PLANS
FOR
WATCHTOWER BIBLE & TRACT SOCIETY OF NEW YORK, INC.

HUDSON VALLEY PERSONNEL SUPPORT CENTER OF JEHOVAH'S WITNESSES
TAX LOTS 97-2-30.1, 30.22 & 33

TOWN OF NEWBURGH
ORANGE COUNTY, NEW YORK

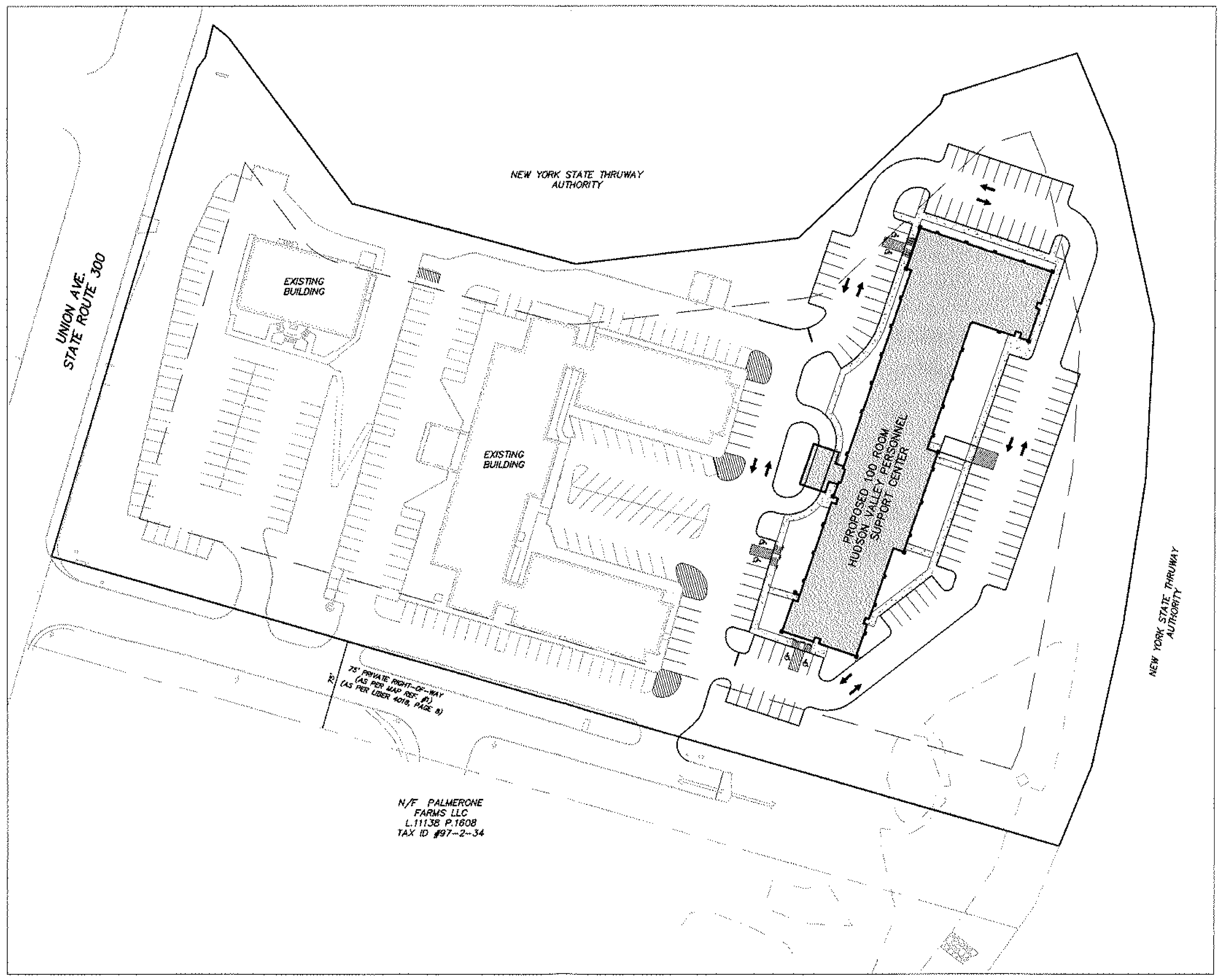

KEY MAP

SCALE: 1"= 60'

60 0 60 120

SCALE IN FEET (1"=60')

DRAWING LIST		
SHT. No.	DESCRIPTION	LATEST REVISION
1	COVER SHEET	
2	LAYOUT & DIMENSION PLAN	
3	GRADING, DRAINAGE & UTILITY PLAN	
4	SOIL EROSION AND SEDIMENT CONTROL PLAN	
5	LANDSCAPE PLAN	
6	LIGHTING PLAN	
7-9	CONSTRUCTION DETAILS	

GENERAL NOTES:

1. THE BOUNDARY, TOPOGRAPHIC AND PLANIMETRIC INFORMATION SHOWN HEREON IS TAKEN FROM A SURVEY ENTITLED, "BOUNDARY AND TOPOGRAPHIC SURVEY FOR WATCHTOWER" PREPARED BY MASER CONSULTING P.A., DATED MAY 20, 2014.
2. NO 100 YEAR FLOOD PLAINS ARE KNOWN TO EXIST ON THE SITE PER THE FLOOD INSURANCE RATE MAP, COMMUNITY-PANEL NO. 360627 0020 A, EFFECTIVE DATE: AUGUST 3, 2009; PREPARED BY THE FEDERAL EMERGENCY MANAGEMENT AGENCY.
3. MATERIALS, WORKMANSHIP, AND CONSTRUCTION FOR THE SITE IMPROVEMENTS SHOWN HEREON SHALL BE IN ACCORDANCE WITH:
   A. NEW YORK STATE DEPARTMENT OF TRANSPORTATION "STANDARD SPECIFICATIONS", MAY 1, 2008; AS SUPPLEMENTED.
   B. CURRENT PREVAILING MUNICIPAL, COUNTY, AND/OR STATE AGENCY SPECIFICATIONS, STANDARDS, CONDITIONS, AND REQUIREMENTS.
   C. CURRENT PREVAILING UTILITY COMPANY/AUTHORITY SPECIFICATIONS, STANDARDS, AND REQUIREMENTS.
   D. CURRENT MANUFACTURER SPECIFICATIONS, STANDARDS, AND REQUIREMENTS.
4. WATER SERVICE TO BE PROVIDED FROM THE EXISTING WATER MAIN LINE IN THE ADJACENT PLAZA ACCESS ROAD, WITHIN THE CONSOLIDATED WATER DISTRICT, OWNED AND OPERATED BY THE TOWN OF NEWBURGH WATER DEPARTMENT. PROPOSED WATER MAIN EXTENSIONS AND FIRE HYDRANT LOCATIONS ARE SUBJECT TO MUNICIPAL REVIEW AND APPROVAL, AND AMERICAN WATERWORKS ASSOCIATION STANDARDS. PIPE MATERIALS SHALL BE CEMENT LINED DUCTILE IRON PIPE, CLASS 52, WITH ASPHALTIC EPOXY TYPE COATING. WATER MAINS SHALL BE INSTALLED TO PROVIDE A MINIMUM 4.5 FEET OF COVER FROM THE TOP OF PIPE TO THE PROPOSED GRADE.
5. SANITARY SEWER SERVICE SHALL BE PROVIDED BY A PUMP STATION AND FORCEMAIN CONNECTION TO AN EXISTING SEWER MAIN IN THE ADJACENT PLAZA ACCESS ROAD, WITHIN THE CROSSROADS SEWER DISTRICT, OWNED AND OPERATED BY THE TOWN OF NEWBURGH SEWER DEPARTMENT. PROPOSED SEWER SERVICE EXTENSION AND PUMP STATION LOCATIONS ARE SUBJECT TO MUNICIPAL REVIEW AND APPROVAL, ACCORDING TO MUNICIPAL AND ORANGE COUNTY HEALTH DEPARTMENT REGULATIONS. PIPE MATERIALS SHALL BE PVC SDR-35, EXCEPT AS NOTED OTHERWISE ON THE PLANS, EXCEPT WHERE SHALLOWER DEPTHS ARE PERMITTED BY THE MUNICIPALITY OR UTILITY AUTHORITY, SEWER LINES, INCLUDING FORCE MAINS AND LATERALS, SHALL BE INSTALLED TO PROVIDE A MINIMUM 4 FEET OF COVER FROM THE TOP OF PIPE TO PROPOSED GRADE.
6. SANITARY SEWERS SHALL BE SEPERATED FROM WATER MAINS BY AT LEAST 10 FEET HORIZONTALLY. IF SUCH SEPARATION IS NOT POSSIBLE, THE PIPES SHALL BE IN SEPARATE TRENCHES WITH THE SANITARY SEWER AT LEAST 18 INCHES BELOW THE BOTTOM OF THE WATER MAIN. WHERE APPROPRIATE SEPERATION IS NOT POSSIBLE, THE SEWER SHALL BE ENCASED IN CONCRETE, OR CONSTRUCTED OF DUCTILE-IRON-PIPE USING MECHANICAL OR SLIP ON JOINTS, FOR A DISTANCE OF 10 FEET ON EITHER SIDE OF THE CROSSING. IN ADDITION, ONE FULL LENGTH OF SEWER PIPE SHOULD BE LOCATED SO BOTH JOINTS ARE AS FAR AWAY AS POSSIBLE FROM THE WATER LINE.
7. GAS, CABLE TELEVISION, AND ELECTRICAL SERVICE PLANS, IF REQUIRED, SHALL BE PREPARED BY THE RESPECTIVE UTILITY COMPANIES THAT SERVICE THE AREA PRIOR TO SITE CONSTRUCTION AND SHALL BE INSTALLED PER ORDINANCE REQUIREMENTS.
8. TELEPHONE, ELECTRIC, AND GAS LINES WILL BE INSTALLED UNDERGROUND. CROSSINGS OF PROPOSED PAVEMENTS WILL BE INSTALLED PRIOR TO THE CONSTRUCTION OF PAVEMENT BASE COURSE.
9. UTILITY RELOCATIONS SHOWN HEREON, IF ANY, ARE FOR INFORMATIONAL PURPOSES ONLY AND MAY NOT REPRESENT ALL REQUIRED UTILITY RELOCATIONS. THE CONTRACTOR IS RESPONSIBLE FOR PERFORMING AND/OR COORDINATING ALL REQUIRED UTILITY RELOCATIONS IN COOPERATION WITH THE RESPECTIVE UTILITY COMPANY/AUTHORITIES.
10. STORM SEWERS SHALL BE CLASS III (OR HIGHER IF NOTED) REINFORCED CONCRETE PIPE (RCP) WITH "O" RING GASKETS, HIGH DENSITY POLYEHTYLENE PIPE (HDPE) OR APPROVED EQUAL AS NOTED. PROPER PIPE COVERAGE SHALL BE MAINTAINED DURING ALL PHASES OF CONSTRUCTION. PIPE LENGTHS SHOWN HEREON ARE FROM CENTER OF STRUCTURE TO CENTER OF STRUCTURE.
11. REFUSE AND RECYCLABLES SHALL BE STORED WITHIN THE EXISTING OUTSIDE SCREENED TRASH ENCLOSURE.
12. TRAFFIC SIGNAGE AND STRIPING SHALL CORRESPOND TO THE MANUAL ON UNIFORM TRAFFIC CONTROL DEVICES.
13. THIS IS A SITE DEVELOPMENT PLAN AND UNLESS SPECIFICALLY NOTED ELSEWHERE HERON, IS NOT A SURVEY.
14. BUILDING FOOTPRINT DIMENSIONS SHOWN HERON ARE APPROXIMATE. FINAL BUILDING FOOTPRINT DIMENSIONS FOR THE BUILDING SHALL BE FURNISHED ON THE ARCHITECTURAL PLANS AT THE TIME OF APPLICATION FOR A BUILDING PERMIT. ALL STRUCTURES SHALL CONFORM TO THE APPROVED BULK ZONING REQUIREMENTS.
15. DO NOT SCALE DRAWINGS AS THEY PERTAIN TO ADJACENT AND SURROUNDING PHYSICAL CONDITIONS, BUILDINGS, STRUCTURES, ETC. THEY ARE SCHEMATIC ONLY, EXCEPT WHERE DIMENSIONS ARE SHOWN THERETO.
16. THIS SET OF PLANS HAS BEEN PREPARED FOR THE PURPOSES OF MUNICIPAL AND AGENCY REVIEW AND APPROVAL. THIS SET OF PLANS SHALL NOT BE UTILIZED AS CONSTRUCTION DOCUMENTS UNTIL ALL APPROVALS REQUIRED HAVE BEEN OBTAINED, ALL CONDITIONS OF APPROVAL HAVE BEEN SATISFIED AND THE DRAWINGS HAVE BEEN STAMPED "ISSUED FOR CONSTRUCTION". THIS SHALL INCLUDE APPROVAL OF ALL CATALOG CUTS, SHOP DRAWINGS AND/OR DESIGN CALCULATIONS AS REQUIRED BY THE PROJECT OWNER AND/OR MUNICIPALITY.
17. EXISTING UTILITY INFORMATION SHOWN HEREON HAS BEEN COLLECTED FROM VARIOUS SOURCES AND IS NOT GUARANTEED AS TO ACCURACY OR COMPLETENESS. THE CONTRACTOR SHALL VERIFY ALL INFORMATION TO HIS SATISFACTION PRIOR TO EXCAVATION. WHERE EXISTING UTILITIES ARE TO BE CROSSED BY PROPOSED CONSTRUCTIONS, TEST PITS SHALL BE DUG BY THE CONTRACTOR PRIOR TO CONSTRUCTION TO ASCERTAIN EXISTING INVERTS, MATERIALS, AND SIZES. TEST PIT INFORMATION SHALL BE GIVEN TO THE ENGINEER PRIOR TO CONSTRUCTION TO PERMIT ADJUSTMENTS AS REQUIRED TO AVOID CONFLICTS. THE CONTRACTOR SHALL NOTIFY THE UNDER SIGNED PROFESSIONAL IMMEDIATELY IF ANY FIELD CONDITIONS ENCOUNTERED DIFFER MATERIALLY FROM THOSE REPRESENTED HEREON. SUCH CONDITIONS COULD RENDER THE DESIGNS HEREON INAPPROPRIATE OR INEFFECTIVE. DIG SAFELY, CONTACT 1-800-962-7962 PRIOR TO EXCAVATION FOR UNDERGROUND UTILITY INFORMATION.
18. THIS PLAN IS NOT DEPICTING ENVIRONMENTAL CONDITIONS OR A CERTIFICATION/WARRANTY REGARDING THE PRESENCE OR ABSENCE OF ENVIRONMENTALLY IMPACTED SITE CONDITIONS. MASER CONSULTING HAS PERFORMED NO EXPLORATORY OR TESTING SERVICES, INTERPRETATIONS, CONCLUSIONS OR OTHER SITE ENVIRONMENTAL SERVICES RELATED TO THE DETERMINATION OF THE POTENTIAL FOR CHEMICAL, TOXIC, RADIOACTIVE OR OTHER TYPE OF CONTAMINANTS AFFECTING THE PROPERTY AND THE UNDERSIGNED PROFESSIONAL IS NOT QUALIFIED TO DETERMINE THE EXISTENCE OF SAME. SHOULD ENVIRONMENTAL CONTAMINATION OR WASTE BE DISCOVERED, THE OWNER AND CONTRACTOR SHALL BE RESPONSIBLE FOR COMPLYING WITH ALL APPLICABLE LAWS AND REGULATIONS.
19. THE CONTRACTOR IS RESPONSIBLE FOR PROJECT SAFETY, INCLUDING PROVISION OF ALL APPROPRIATE SAFETY DEVICES AND TRAINING REQUIRED.
20. THESE GENERAL NOTES SHALL APPLY TO ALL SHEETS IN THIS SET.

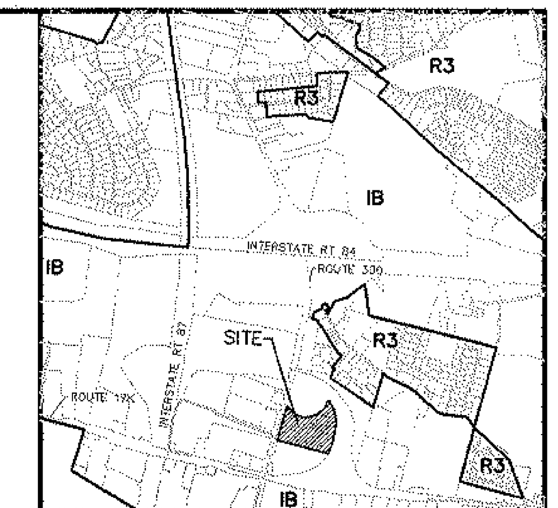

LOCATION MAP
SCALE: 1"= 2000'

PLAN NORTH

Rev.	DATE	DRAWN BY	DESCRIPTION

UNAUTHORIZED ALTERATION TO A MAP BEARING A LICENSED PROFESSIONAL ENGINEER'S SEAL IS A VIOLATION OF SECTION 7209, SUB-DIVISION 2, OF THE NEW YORK STATE EDUCATION LAW. THE CERTIFICATION IS NOT AN EXPRESS OR IMPLIED WARRANTY OR GUARANTEE. IT IS PURELY A STATEMENT OF PROFESSIONAL OPINION BASED ON KNOWLEDGE, INFORMATION AND BELIEF, BASED ON EXISTING FIELD EVIDENCE AND DOCUMENTARY EVIDENCE AVAILABLE. CERTIFICATIONS ARE NOT TRANSFERABLE TO ADDITIONAL INSTITUTIONS OR SUBSEQUENT OWNERS.

ANDREW B. FETHERSTON
NEW YORK PROFESSIONAL ENGINEER

MASER CONSULTING P.A.
Consulting, Municipal & Environmental Engineers
Planners • Surveyors • Landscape Architects
State of N.Y. Certificate of Authorization: 0030172

New Jersey New York Pennsylvania Virginia
Customer Loyalty through Client Satisfaction

COPYRIGHT ©2014, MASER CONSULTING P.A
ALL RIGHTS RESERVED
THIS DRAWING AND ALL THE INFORMATION CONTAINED HEREIN IS AUTHORIZED FOR USE ONLY BY THE PARTY FOR WHOM THE WORK WAS CONTRACTED OR TO WHOM IT IS CERTIFIED. THIS DRAWING MAY NOT BE COPIED, REUSED, DISCLOSED, DISTRIBUTED OR RELIED UPON FOR ANY OTHER PURPOSE WITHOUT THE EXPRESS WRITTEN CONSENT OF MASER CONSULTING, P.A.

NEWBURGH OFFICE
1607 Route 300
Suite 101
Newburgh, NY 12550
Phone: 845.564.4495
Fax: 845.564.0278
email: solutions @ maserconsulting.com

HUDSON VALLEY PERSONNEL SUPPORT CENTER OF JEHOVAH'S WITNESSES
COVER SHEET
FOR
WATCHTOWER BIBLE & TRACT SOCIETY OF NEW YORK, INC.
TAX LOTS 97-2-30.1, 30.22 & 33
TOWN OF NEWBURGH ORANGE COUNTY N.Y.

SCALE:	DATE:	DRAWN BY:	CHECKED BY:
AS NOTED	11/21/14	JED	ABF

PROJECT NUMBER: 13000398C

SHEET NUMBER: 1 of 9

OWNER/APPLICANT:

WATCHTOWER BIBLE AND TRACT SOCIETY OF NEW YORK, INC.
25 COLUMBIA HEIGHTS
BROOKLYN, NY 11201

TAX LOTS:

97-2-30.1, 30.22 & 33

SITE AREA:

373,900 SQ. FT.
±8.59 ACRES

NOTES:

1. FIRE DISTRICT: ORANGE LAKE
2. SCHOOL DISTRICT: NEWBURGH
3. THE PROPERTY IS NOT WITHIN ANY ONE-HUNDRED-YEAR FLOOD PLAIN AS PER FLOOD INSURANCE RATE MAP, NO. 36071C0139E.

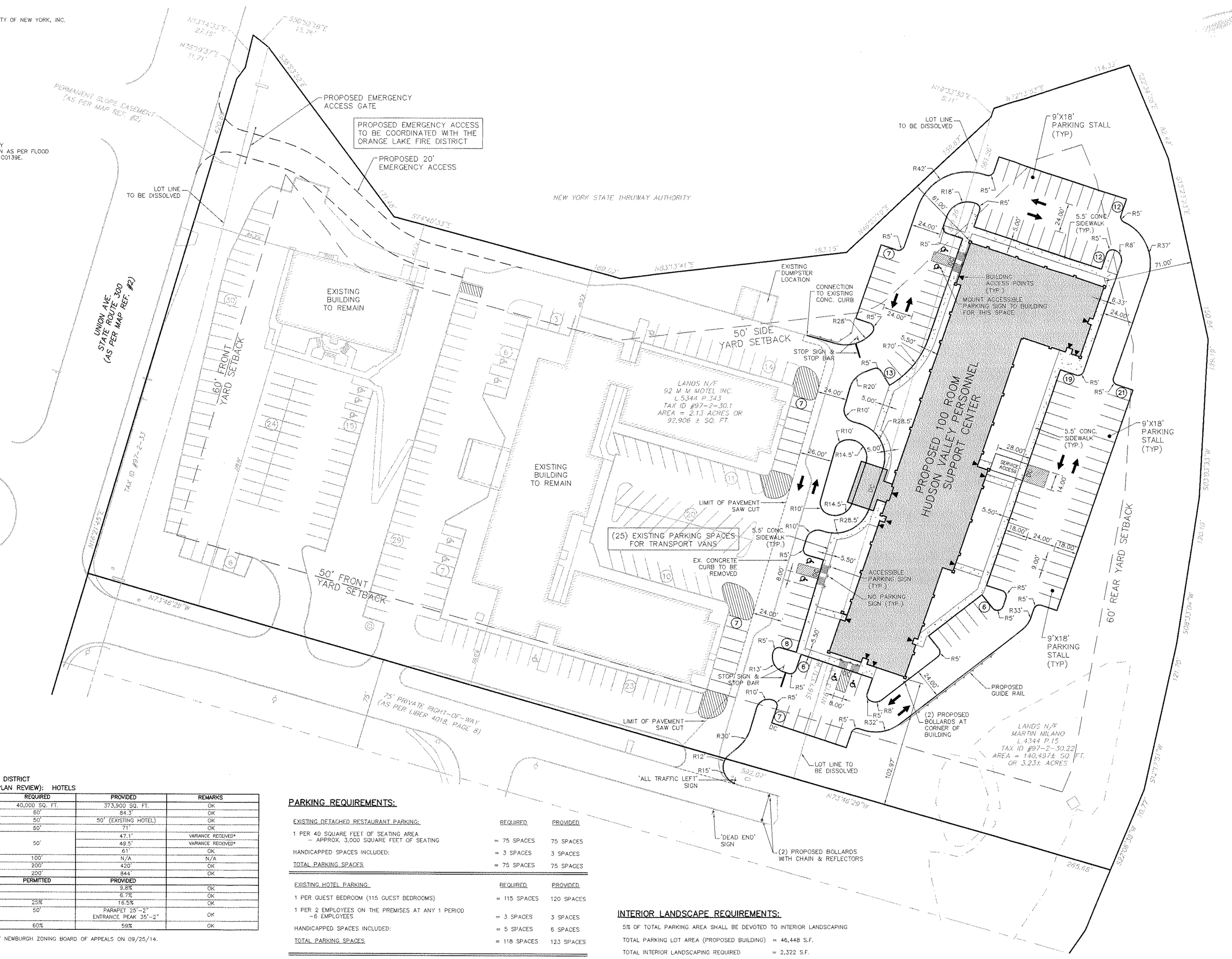

BULK TABLE

ZONE: IB – INTERCHANGE BUSINESS DISTRICT
PERMITTED USE (SUBJECT TO SITE PLAN REVIEW): HOTELS

MINIMUM:	REQUIRED	PROVIDED	REMARKS
LOT AREA	40,000 SQ. FT.	373,900 SQ. FT.	OK
FRONT YARD (STATE/COUNTY HIGHWAY)	60'	84.3'	OK
FRONT YARD	50'	50' (EXISTING HOTEL)	OK
REAR YARD	50'	71'	OK
SIDE YARD (ONE) EXISTING RESTAURANT	50'	47.1'	VARIANCE RECEIVED*
SIDE YARD (ONE) EXISTING HOTEL		49.5'	VARIANCE RECEIVED*
SIDE YARD (ONE) PROPOSED HOTEL		61'	OK
SIDE YARD (BOTH)	100'	N/A	N/A
LOT WIDTH (MEASURED ALONG RT 300)	200'	420'	OK
LOT DEPTH	200'	844'	OK
MAXIMUM:	**PERMITTED**	**PROVIDED**	
EXISTING BUILDING COVERAGE		9.8%	OK
PROPOSED BUILDING COVERAGE		6.7%	OK
TOTAL BUILDING COVERAGE	25%	16.5%	OK
BUILDING HEIGHT	50'	PARAPET 25'-2" ENTRANCE PEAK 35'-2"	OK
TOTAL LOT SURFACE COVERAGE	60%	59%	OK

* VARIANCE RECEIVED FROM THE TOWN OF NEWBURGH ZONING BOARD OF APPEALS ON 09/25/14.

N.Y.S. ROUTE 300 NOTE:

1. ALL PROPOSED IMPROVEMENTS WITHIN THE N.Y.S. ROUTE 300 RIGHT-OF-WAY FOR THE PROPOSED EMERGENCY ACCESS ARE TO BE REVIEWED, APPROVED AND PERMITTED WITH NEW YORK STATE DEPARTMENT OF TRANSPORTATION.

REFERENCE:

1. BOUNDARY, TOPOGRAPHIC AND PLANIMETRICS INFORMATION SHOWN HEREON IS TAKEN FROM A SURVEY ENTITLED, "BOUNDARY AND TOPOGRAPHIC SURVEY FOR WATCHTOWER" PREPARED BY MASER CONSULTING P.A., DATED MAY 20, 2014.

PARKING REQUIREMENTS:

EXISTING DETACHED RESTAURANT PARKING:	REQUIRED	PROVIDED
1 PER 40 SQUARE FEET OF SEATING AREA – APPROX. 3,000 SQUARE FEET OF SEATING	= 75 SPACES	75 SPACES
HANDICAPPED SPACES INCLUDED:	= 3 SPACES	3 SPACES
TOTAL PARKING SPACES	= 75 SPACES	75 SPACES

EXISTING HOTEL PARKING:	REQUIRED	PROVIDED
1 PER GUEST BEDROOM (115 GUEST BEDROOMS)	= 115 SPACES	120 SPACES
1 PER 2 EMPLOYEES ON THE PREMISES AT ANY 1 PERIOD –6 EMPLOYEES	= 3 SPACES	3 SPACES
HANDICAPPED SPACES INCLUDED:	= 5 SPACES	6 SPACES
TOTAL PARKING SPACES	= 118 SPACES	123 SPACES

PROPOSED HOTEL PARKING:	REQUIRED	PROVIDED
1 PER GUEST BEDROOM (100 GUEST BEDROOMS)	= 100 SPACES	122 SPACES
1 PER 2 EMPLOYEES ON THE PREMISES AT ANY 1 PERIOD –6 EMPLOYEES	= 3 SPACES	3 SPACES
HANDICAPPED SPACES INCLUDED:	= 5 SPACES	6 SPACES
TOTAL PARKING SPACES	= 103 SPACES	125 SPACES

INTERIOR LANDSCAPE REQUIREMENTS:

5% OF TOTAL PARKING AREA SHALL BE DEVOTED TO INTERIOR LANDSCAPING

TOTAL PARKING LOT AREA (PROPOSED BUILDING)	= 46,448 S.F.
TOTAL INTERIOR LANDSCAPING REQUIRED	= 2,322 S.F.
TOTAL INTERIOR LANDSCAPING PROVIDED	= 4,013 S.F.

EXISTING
- SITE BOUNDARY
- SIGN

PROPOSED
- SETBACK LINE
- GUIDE RAIL
- CURBLINE
- (8) PARKING STALL COUNT
- TRAFFIC FLOW ARROW
- STRIPING
- SIGN
- DC DEPRESSED CURB

DRAWING LEGEND

PLAN NORTH

30 0 30 60
SCALE IN FEET (1"=30')

Rev.	DATE	DRAWN BY	DESCRIPTION

UNAUTHORIZED ALTERATION TO A MAP BEARING A LICENSED PROFESSIONAL ENGINEER'S SEAL IS A VIOLATION OF SECTION 7209, SUB-DIVISION 2, OF THE NEW YORK STATE EDUCATION LAW. THE CERTIFICATION IS NOT AN EXPRESS OR IMPLIED WARRANTY OR GUARANTEE. IT IS PURELY A STATEMENT OF PROFESSIONAL OPINION BASED ON KNOWLEDGE, INFORMATION AND BELIEF, BASED ON EXISTING FIELD EVIDENCE AND DOCUMENTARY EVIDENCE AVAILABLE. CERTIFICATIONS ARE NOT TRANSFERABLE TO ADDITIONAL PARTIES OR SUBSEQUENT OWNERS.

ANDREW B. FETHERSTON
NEW YORK STATE LICENSED PROFESSIONAL ENGINEER

MASER CONSULTING P.A.
Consulting Municipal & Environmental Engineers
Planners * Surveyors * Landscape Architects
State of N.Y. Certificate of Authorization: 0000172
New Jersey New York Pennsylvania Virginia
Customer Loyalty through Client Satisfaction

COPYRIGHT ©2014, MASER CONSULTING P.A
ALL RIGHTS RESERVED
THIS DRAWING AND ALL THE INFORMATION CONTAINED HEREON IS AUTHORIZED FOR USE ONLY BY THE PARTY FOR WHOM THE WORK WAS CONTRACTED OR TO WHOM IT IS CERTIFIED. THIS DRAWING MAY NOT BE COPIED, REUSED, DISCLOSED, DISTRIBUTED OR RELIED UPON FOR ANY OTHER PURPOSE WITHOUT THE EXPRESS WRITTEN CONSENT OF MASER CONSULTING, P.A.

NEWBURGH OFFICE
1607 Route 300
Suite 101
Newburgh, NY 12550
Phone: 845.564.4495
Fax: 845.564.0278
email: solutions @ maserconsulting.com

HUDSON VALLEY PERSONNEL SUPPORT CENTER OF JEHOVAH'S WITNESSES

LAYOUT & DIMENSION PLAN

FOR

WATCHTOWER BIBLE & TRACT SOCIETY OF NEW YORK, INC.

TAX LOTS 97-2-30.1, 30.22 & 33
TOWN OF NEWBURGH ORANGE COUNTY N.Y.

SCALE:	DATE:	DRAWN BY:	CHECKED BY:
1"=30'	11/21/14	JED	ABF

PROJECT NUMBER: 13000398C

SHEET NUMBER: 2 of 9

GRADING NOTES:

1. PROPOSED GRADE ELEVATIONS SHOWN AT BUILDING LINE ARE GROUND ELEVATIONS.
2. PROPOSED SPOT ELEVATIONS IN PAVEMENT AREAS ARE TOP OF FINISHED PAVEMENT.
3. ALL ROOF LEADERS SHALL CONNECT TO THE PROPOSED DRAINAGE SYSTEM. LOCATIONS OF ROOF LEADERS AS PER FINAL ARCHITECTURAL PLANS.
4. ALL PROPOSED CURBING IS TO BE CONCRETE CURB WITH A 6" REVEAL AS PER DETAIL UNLESS SHOWN OTHERWISE ON THIS GRADING PLAN.
5. CURB AND SIDEWALK ARE TO BE DEPRESSED AT PROPOSED CROSSWALKS, SERVICE ACCESS POINTS AND ROADWAY INTERSECTIONS PER THE LOCATIONS ON THE SITE PLANS. ANY DISCREPANCIES SHALL BE REVIEWED WITH THE PROJECT ENGINEER.
6. REFER TO ARCHITECTURAL PLANS FOR IMPROVEMENTS TO THE EXITING RAMP AND STAIR ACCESS TO THE FACILITY.

ADA INSTRUCTIONS TO CONTRACTOR

CONTRACTORS SHALL EXERCISE APPROPRIATE CARE AND PRECISION IN CONSTRUCTION OF ADA (HANDICAPPED) ACCESSIBLE COMPONENTS FOR THE SITE. THESE COMPONENTS, AS CONSTRUCTED, MUST COMPLY WITH THE LATEST ADA STANDARDS FOR ACCESSIBLE DESIGN. FINISHED SURFACES ALONG THE ACCESSIBLE ROUTE OF TRAVEL FROM PARKING SPACE, PUBLIC TRANSPORTATION, PEDESTRIAN ACCESS, INTER-BUILDING ACCESS, TO POINTS OF ACCESSIBLE BUILDING ENTRANCE/EGRESS, SHALL COMPLY WITH THESE ADA CODE REQUIREMENTS. THESE INCLUDED, BUT ARE NOT LIMITED TO THE FOLLOWING:

- PARKING SPACES AND PARKING AISLES -- SLOPE SHALL NOT EXCEED 1:48 (1/4"PER FOOT OR NORMALLY 2.0%) IN ANY DIRECTION
- CURB RAMPS -- SLOPES SHALL NOT EXCEED 1:12 (8.3%) FOR A MAXIMUM OF SIX (6) FEET.
- LANDINGS -- SHALL BE PROVIDED AT EACH END OF RAMPS, SHALL PROVIDE POSITIVE DRAINAGE, AND SHALL NOT EXCEED 1:48 (1/4"PER FOOT OR NORMALLY 2.0%) CROSS SLOPE.
- PATH OF TRAVEL ALONG ACCESSIBLE ROUTE -- SHALL PROVIDE A 36 INCH OR GREATER UNOBSTRUCTED WIDTH OF TRAVEL. (CAR OVERHANGS CANNOT REDUCE THIS MINIMUM WIDTH). THE SLOPE SHALL BE NO GREATER THAN 1:20 (5.0% OR 5/6"PER FOOT) IN THE DIRECTION OF TRAVEL, AND SHALL NOT EXCEED 1:48 (1/4"PER FOOT OR NORMALLY 2.0%) IN CROSS SLOPE. WHERE PATH OF TRAVEL WILL BE GREATER THAN 1:20 (5.0%), AN ADA RAMP WITH A MAXIMUM SLOPE OF 1:12 (8.3%), FOR A MAXIMUM DISTANCE OF 30 FEET, SHALL BE PROVIDED. THE RAMP SHALL HAVE ADA HAND RAILS AND "LEVEL"LANDINGS ON EACH END THAT ARE CROSS SLOPED NO MORE THAN 1:48 (1/4"PER FOOT OR NORMALLY 2.0%) FOR POSITIVE DRAINAGE.
- DOORWAYS -- SHALL HAVE A "LEVEL"LANDING AREA ON THE EXTERIOR SIDE UP THE DOOR THAT IS SLOPED NO MORE THAN 1:48 (1/4"PER FOOT OR NORMALLY 2.0%) FOR POSITIVE DRAINAGE. THIS LANDING AREA SHALL BE NO LESS THAN 60 INCHES (5 FEET) LONG, EXCEPT WHERE OTHERWISE PERMITTED BY ADA STANDARDS FOR ALTERNATIVE DOORWAY OPENING CONDITIONS (SEE APPLICABLE CODE SECTIONS).

IT IS RECOMMENDED THAT THE CONTRACTOR REVIEW THE INTENDED CONSTRUCTION WITH THE LOCAL BUILDING CODE OFFICIAL PRIOR TO COMMENCING WORK.

STORMWATER MANAGEMENT NOTE:

1. OWNER/CONTRACTOR IS REQUIRED TO PREPARE AND SUBMIT A STORMWATER COMPLIANCE REPORT FOR THE MAINTENANCE AND OPERATION OF THE CONSTRUCTED STORMWATER MANAGEMENT FACILITIES ON SITE. THESE REPORTS SHALL BE SUBMITTED TO THE CODE COMPLIANCE DEPARTMENT OF THE TOWN OF NEWBURGH.

PROPOSED

- PIPE FLOW DIRECTION
- OVERLAND FLOW DIRECTION
- STORM PIPE
- SANITARY FORCEMAIN
- WATERMAIN
- CONTOUR
- 10.00 SPOT ELEVATION
- DRAINAGE INLET
- CATCH BASIN
- FLARED END SECTION
- RIP-RAP SLOPE PROTECTION
- PROPOSED TREELINE

DRAWING LEGEND

PLAN NORTH

30 0 30 60
SCALE IN FEET
(1"=30')

Rev.	DATE	DRAWN BY	DESCRIPTION

UNAUTHORIZED ALTERATION TO A MAP BEARING A LICENSED PROFESSIONAL ENGINEER'S SEAL IS A VIOLATION OF SECTION 7209, SUB-DIVISION 2, OF THE NEW YORK STATE EDUCATION LAW. THIS CERTIFICATION IS NOT AN EXPRESS OR IMPLIED WARRANTY OR GUARANTEE. IT IS SOLELY A STATEMENT OF PROFESSIONAL OPINION BASED ON KNOWLEDGE, INFORMATION AND BELIEF, BASED ON EXISTING LAWS, CODES, REGULATIONS, STANDARDS AND ACCEPTED ENGINEERING PRACTICE. NOT TRANSFERABLE TO OTHERS INCLUDING OWNERS OR SUBSEQUENT OWNERS.

ANDREW B. FITZPATRICK
NEW YORK STATE LICENSED PROFESSIONAL
ENGINEER LIC. NO. 073555

MASER CONSULTING P.A.
Consulting, Municipal & Environmental Engineers
Planners • Surveyors • Landscape Architects
State of N.Y. Certificate of Authorization: 0000172
New Jersey New York Pennsylvania Virginia
Customer Loyalty through Client Satisfaction

COPYRIGHT ©2014, MASER CONSULTING P.A
ALL RIGHTS RESERVED
THIS DRAWING AND ALL THE INFORMATION CONTAINED HEREIN IS AUTHORIZED FOR USE ONLY BY THE PARTY FOR WHOM IT WAS PREPARED (CONTRACTEE) OR TO WHOM IT IS CERTIFIED. THIS DRAWING MAY NOT BE COPIED, REVISED, SPECIFIED, DISTRIBUTED OR RELIED UPON FOR ANY OTHER PURPOSE WITHOUT THE EXPRESS WRITTEN CONSENT OF MASER CONSULTING, P.A.

NEWBURGH OFFICE
1607 Route 300
Suite 101
Newburgh, NY 12550
Phone: 845.564.4495
Fax: 845.564.0278
email: solutions@maserconsulting.com

HUDSON VALLEY PERSONNEL SUPPORT CENTER OF
JEHOVAH'S WITNESSES

GRADING & UTILITY PLAN
FOR
WATCHTOWER BIBLE & TRACT SOCIETY OF NEW YORK, INC.
TAX LOTS 97-2-30.1, 30.22 & 33
TOWN OF NEWBURGH ORANGE COUNTY N.Y.

SCALE:	DATE:	DRAWN BY:	CHECKED BY:
1"=30'	11/21/14	JJS	ABF

PROJECT NUMBER: 13000398C

SHEET NUMBER: 3 of 9

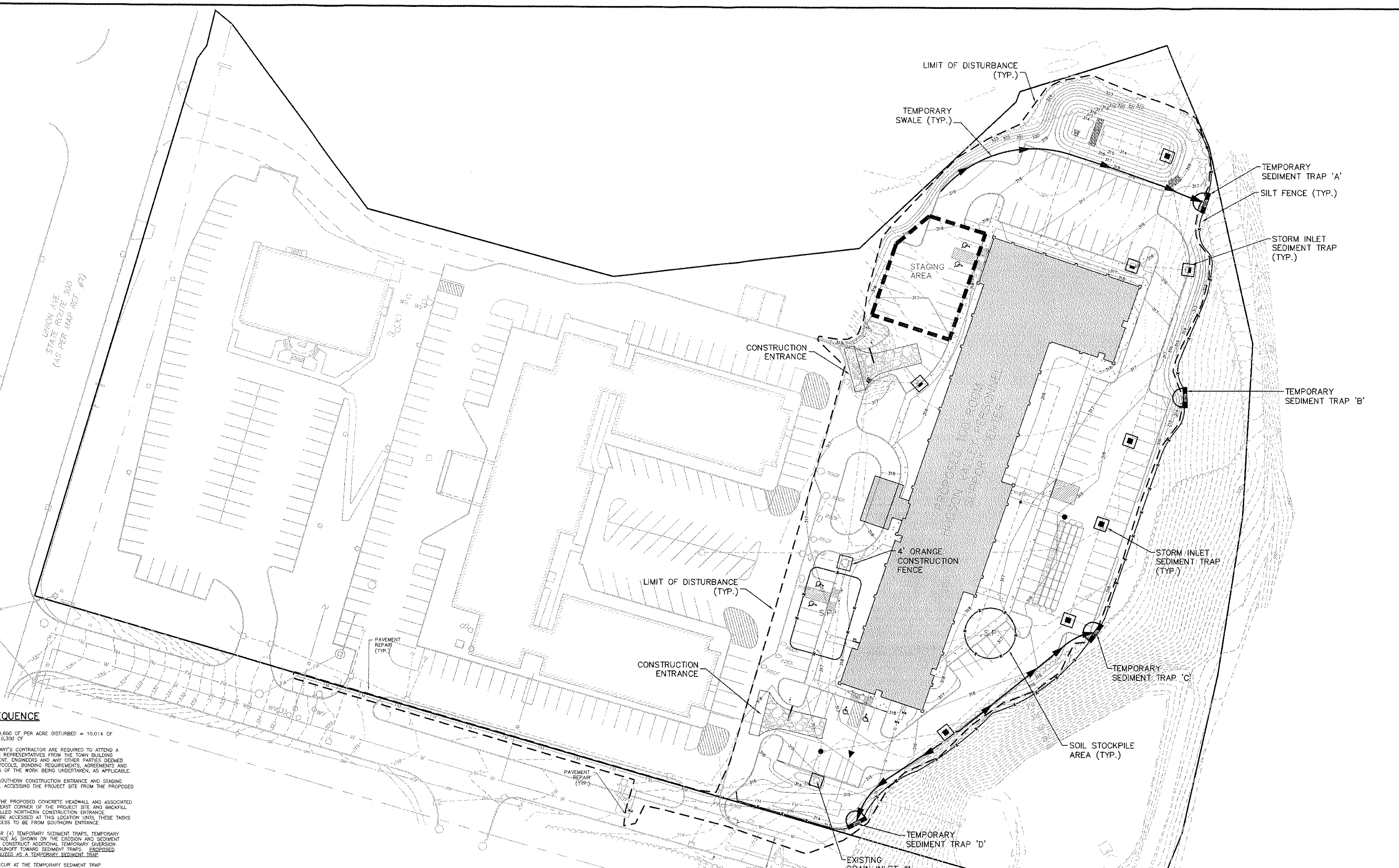

CONSTRUCTION SEQUENCE

DISTURBANCE AREA = 2.78 ACRES
TEMPORARY STORAGE REQUIRED = 3,600 CF PER ACRE DISTURBED = 10,014 CF
TEMPORARY STORAGE PROVIDED = 10,300 CF

1. THE APPLICANT AND THE APPLICANT'S CONTRACTOR ARE REQUIRED TO ATTEND A PRECONSTRUCTION MEETING WITH REPRESENTATIVES FROM THE TOWN BUILDING DEPARTMENT, HIGHWAY DEPARTMENT, ENGINEERS AND ANY OTHER PARTIES DEEMED NECESSARY TO REVIEW ALL PROTOCOLS, BONDING REQUIREMENTS, AGREEMENTS AND THE SEQUENCE AND SCHEDULING OF THE WORK BEING UNDERTAKEN, AS APPLICABLE.
2. CONSTRUCT AND MAINTAIN THE SOUTHERN CONSTRUCTION ENTRANCE AND STAGING AREA AS SHOWN ON THE PLANS, ACCESSING THE PROJECT SITE FROM THE PROPOSED SOUTHERN LOCATION.
3. INSTALL DRAINAGE MANHOLE 2, THE PROPOSED CONCRETE HEADWALL AND ASSOCIATED DRAINAGE WORKS AT THE NORTHEAST CORNER OF THE PROJECT SITE AND BACKFILL AREA, ROUGH GRADE, AND INSTALLED NORTHERN CONSTRUCTION ENTRANCE. CONSTRUCTION SITE SHALL NOT BE ACCESSED AT THIS LOCATION UNTIL THESE TASKS HAVE BEEN COMPLETED, ALL ACCESS TO BE FROM SOUTHERN ENTRANCE.
4. CONTRACTOR SHALL INSTALL FOUR (4) TEMPORARY SEDIMENT TRAPS, TEMPORARY DIVERSION SWALES, AND SILT FENCE AS SHOWN ON THE EROSION AND SEDIMENT CONTROL PLAN. CONTRACTOR TO CONSTRUCT ADDITIONAL TEMPORARY DIVERSION SWALES AS NEEDED TO DIRECT RUNOFF TOWARD SEDIMENT TRAPS. PROPOSED BIORETENTION SHALL NOT BE UTILIZED AS A TEMPORARY SEDIMENT TRAP.

   SHOULD ANY SLOPE EROSION OCCUR AT THE TEMPORARY SEDIMENT TRAP DISCHARGE POINTS THE CONTRACTOR SHALL DE-WATER EACH TRAP TO THE EXISTING DRAIN INLET #1 AT THE SOUTH END OF THE SITE.
5. EARTHWORK SHALL BE CONDUCTED PAYING CLOSE ATTENTION TO MINIMIZING COMPACTION OF THE BIORETENTION AREA TO THE NORTH OF THE PROPOSED BUILDING LOCATION. UPON ROUGH GRADES BEING MET, CONSTRUCTION FENCE SHOULD BE INSTALLED TO PROTECT THIS AREA FORM UNNECESSARY COMPACTION. EXCAVATED MATERIALS SHALL BE STORED IN STOCKPILES, CORDONED OFF WITH SILT FENCE PER THE APPROPRIATE SPECIFICATIONS AND DETAILS, AND REMOVED FROM THE PROJECT SITE AS IS PRACTICAL. THE CONTRACTOR SHALL ROUGH GRADE AREA INCLUDING PROPOSED PARKING AREAS AND THE BUILDING FOOTPRINT.
6. CONTRACTOR SHALL INSTALL PROPOSED UTILITIES INCLUDING STORM SEWER, CATCH BASINS, INFILTRATION CHAMBERS, WATER SERVICE, PROPOSED SANITARY PUMP STATION AND FORCEMAIN. INVERTS SHALL BE PLUGGED AND MAINTAINED THROUGHOUT THE CONSTRUCTION PROCESS TO PROTECT SUBSURFACE INFILTRATION AREA.
7. CONTRACTOR SHALL INSTALL CONCRETE CURB AND PAVE BASE COURSE AS SOON AS PRACTICAL TO STABILIZE IMPERVIOUS AREAS. CONTRACTOR SHALL ALSO INSTALL STORM INLET SEDIMENT TRAPS ON ALL DRAINAGE STRUCTURES.
8. CONTRACTOR SHALL BEGIN CONSTRUCTION ON PROPOSED BUILDING. AFTER COMPLETION OF BUILDING EXTERIOR, GRADE AND SPREAD TOPSOIL ON ALL LAWN AREAS AND SEED, INSTALL SIDEWALKS. CONTRACTOR SHALL CLEAR DRAINAGE PIPES AND STRUCTURES OF ANY SEDIMENT WHICH MAY HAVE ACCUMULATED.
9. MAINTAIN ALL SEEDED AND PLANTED AREAS TO INSURE A VIABLE STABILIZED VEGETATIVE COVER.
10. STABILIZATION* – THE OPERATOR SHALL INITIATE STABILIZATION MEASURES AS SOON AS PRACTICABLE IN PORTIONS OF THE SITE WHERE CONSTRUCTION ACTIVITIES HAVE TEMPORARILY OR PERMANENTLY CEASED, BUT IN NO CASE MORE THAN SEVEN (7) DAYS AFTER THE CONSTRUCTION ACTIVITY IN THAT PORTION OF THE SITE HAS TEMPORARILY OR PERMANENTLY CEASED.
    * STABILIZATION MEANS COVERING OR MAINTAINING A COVER OVER SOIL. COVER CAN BE VEGETATIVE (E.G. GRASS, SEED AND MULCH, SHRUBS, OR TURF) OR NON-VEGETATIVE (E.G. GEOTEXTILES, RIP-RAP, OR GABIONS) PER SPDES GENERAL PERMIT FOR STORMWATER RUNOFF FROM CONSTRUCTION ACTIVITY, GP-0-10-001 OR AS AMENDED.
11. ADDITIONAL EROSION CONTROL MEASURES SHALL BE INSTALLED, AS MAY BE NECESSARY, REQUIRED AND/OR REQUESTED BY AUTHORITIES, TO PREVENT THE INCIDENTAL DISCHARGE OF SILT LADEN RUNOFF FROM ENTERING A WATER COURSE OR A DRAINAGE SYSTEM.
12. THE GENERAL PERMIT FOR STORMWATER DISCHARGES FROM CONSTRUCTION ACTIVITIES STATES THAT IT IS UNLAWFUL FOR ANY PERSON TO CAUSE OR CONTRIBUTE TO A VIOLATION OF WATER QUALITY STANDARDS.
13. THE PROJECT SITE MUST BE STABILIZED PRIOR TO REMOVING ALL EROSION AND SEDIMENT CONTROL DEVICES AND CLOSING OUT THE PROJECT. LITTER AND CONSTRUCTION DEBRIS SHALL BE REMOVED AS PRACTICAL THROUGHOUT THE LIFE OF THE PROJECT.

GENERAL SOIL EROSION AND SEDIMENT CONTROL NOTES

TOTAL SITE DISTURBANCE = ±2.78 ACRES

1. ALL SOIL EROSION AND SEDIMENT CONTROL PRACTICES ARE TO BE INSTALLED PRIOR TO ANY MAJOR SOIL DISTURBANCE, OR IN THEIR PROPER SEQUENCE, AND MAINTAINED UNTIL PERMANENT PROTECTION IS ESTABLISHED.
2. ANY DISTURBED AREAS THAT WILL BE LEFT EXPOSED MORE THAN SEVEN (7) DAYS, AND NOT SUBJECT TO CONSTRUCTION TRAFFIC, WILL IMMEDIATELY RECEIVE A TEMPORARY SEEDING. IF THE SEASON PREVENTS THE ESTABLISHMENT OF TEMPORARY COVER, THE DISTURBED AREAS WILL BE MULCHED WITH STRAW, OR EQUIVALENT MATERIAL, AT A RATE OF TWO (2) TONS PER ACRE, ACCORDING TO STATE STANDARDS.
3. PERMANENT VEGETATION TO BE SEEDED OR SODDED ON ALL EXPOSED AREAS WITHIN SEVEN (7) DAYS AFTER FINAL GRADING. MULCHING IS REQUIRED ON ALL SEEDING. WHEN HYDROSEEDING, MULCH SHALL NOT BE INCLUDED IN THE TANK WITH THE SEED.
4. ALL WORK TO BE DONE IN ACCORDANCE WITH THE NEW YORK STANDARDS AND SPECIFICATIONS FOR EROSION AND SEDIMENT CONTROL.
5. A SUBBASE COURSE WILL BE APPLIED IMMEDIATELY FOLLOWING ROUGH GRADING AND INSTALLATION OF IMPROVEMENTS TO STABILIZE STREETS, ROADS, DRIVEWAYS, AND PARKING AREAS. IN AREAS WHERE NO UTILITIES ARE PRESENT, THE SUBBASE SHALL BE INSTALLED WITHIN FIVE (5) DAYS OF THE PRELIMINARY GRADING.
6. IMMEDIATELY FOLLOWING INITIAL DISTURBANCE OR ROUGH GRADING, ALL CRITICAL AREAS SUBJECT TO EROSION (I.E. STEEP SLOPES AND ROADWAY EMBANKMENTS) WILL RECEIVE A TEMPORARY SEEDING IN COMBINATION WITH STRAW MULCH OR A SUITABLE EQUIVALENT, AT A RATE OF TWO (2) TONS PER ACRE, ACCORDING TO STATE STANDARDS.
7. ANY STEEP SLOPES RECEIVING PIPELINE INSTALLATION WILL BE BACKFILLED AND STABILIZED DAILY, AS THE INSTALLATION CONTINUES (I.E. SLOPES GREATER THAN 3:1).
8. THE STANDARD FOR STABILIZED CONSTRUCTION ACCESS REQUIRES THE INSTALLATION OF A STONE PAD, AT ALL CONSTRUCTION DRIVEWAYS, IMMEDIATELY AFTER INITIAL SITE DISTURBANCE.
9. IN ACCORDANCE WITH THE STANDARD FOR MANAGEMENT OF HIGH ACID PRODUCING SOILS, ANY SOIL HAVING A PH OF 4 OR LESS OR CONTAINING IRON SULFIDES SHALL BE COVERED WITH A MINIMUM OF TWELVE (12) INCHES OF SOIL HAVING A PH OF 5 OR MORE PRIOR TO SEEDBED PREPARATION. AREAS WHERE TREES OR SHRUBS ARE TO BE PLANTED SHALL BE COVERED WITH A MINIMUM OF TWENTY-FOUR (24) INCHES OF SOIL HAVING A PH OF 5 OR MORE.
10. AT THE TIME THE SITE PREPARATION FOR PERMANENT VEGETATIVE STABILIZATION IS GOING TO BE ACCOMPLISHED, ANY SOIL THAT WILL NOT PROVIDE A SUITABLE ENVIRONMENT TO SUPPORT ADEQUATE VEGETATIVE GROUND COVER, SHALL BE REMOVED OR TREATED IN SUCH A WAY THAT IT WILL PERMANENTLY ADJUST THE SOIL CONDITIONS AND RENDER IT SUITABLE FOR VEGETATIVE GROUND COVER. IF THE REMOVAL OR TREATMENT OF THE SOIL WILL NOT PROVIDE SUITABLE CONDITIONS, NONVEGETATIVE MEANS OF PERMANENT GROUND STABILIZATION WILL HAVE TO BE EMPLOYED.
11. CONDUIT OUTLET PROTECTION MUST BE INSTALLED AT ALL OUTFALLS PRIOR TO THE DRAINAGE SYSTEM BECOMING OPERATIONAL.
12. UNFILTERED DEWATERING IS NOT PERMITTED. TAKE ALL NECESSARY PRECAUTIONS DURING ALL DEWATERING OPERATIONS TO MINIMIZE SEDIMENT TRANSFER. ANY DEWATERING METHODS USED MUST BE IN ACCORDANCE WITH STATE STANDARDS.
13. SHOULD THE CONTROL OF DUST AT THE SITE BE NECESSARY, THE SITE WILL BE SPRINKLED UNTIL THE SURFACE IS WET, TEMPORARY VEGETATIVE COVER SHALL BE ESTABLISHED OR MULCH SHALL BE APPLIED IN ACCORDANCE WITH STATE STANDARDS FOR EROSION CONTROL.
14. ALL SOIL WASHED, DROPPED, SPILLED, OR TRACKED OUTSIDE THE LIMIT OF DISTURBANCE OR ONTO PUBLIC RIGHTS-OF-WAY WILL BE REMOVED IMMEDIATELY.
15. THE PROPERTY OWNER SHALL BE RESPONSIBLE FOR ANY EROSION AND SEDIMENTATION THAT MAY OCCUR BELOW STORMWATER OUTFALLS OR OFFSITE AS A RESULT OF CONSTRUCTION OF THE PROJECT.
16. STOCKPILE AND STAGING LOCATIONS DETERMINED IN THE FIELD, SHALL BE PLACED WITHIN THE LIMITS OF DISTURBANCE ACCORDING TO THE CERTIFIED PLAN.
17. ALL SOIL STOCKPILES ARE TO BE TEMPORARILY STABILIZED IN ACCORDANCE WITH SOIL EROSION AND SEDIMENT CONTROL.
18. ALL PERMANENT SOIL EROSION AND SEDIMENT CONTROL MEASURES SHALL BE MAINTAINED BY THE PROPERTY OWNER, AND SHALL BECOME THEIR RESPONSIBILITY.
19. PAVEMENT AREAS ARE TO BE KEPT CLEAN AT ALL TIMES.
20. DURING CONSTRUCTION, ANY ADDITIONAL CONTROL MEASURES AS DEEMED NECESSARY TO PREVENT EROSION OR CONTROL SEDIMENT BEYOND THOSE MEASURES SHOWN ON THE APPROVED PLAN SHALL BE INSTALLED OR EMPLOYED AT THE DIRECTION OF THE MUNICIPAL ENGINEER.

TREE PROTECTION NOTES:

1. TREE PROTECTION FENCING TO BE INSTALLED ALONG THE DISTURBANCE LIMIT LINE WHEREVER EROSION CONTROL FENCING IS NOT PROPOSED.
2. THERE SHALL BE NO STORAGE OF EQUIPMENT OR MATERIALS OUTSIDE CLEARING LIMITS. NO EQUIPMENT IS PERMITTED OUTSIDE CLEARING LIMITS.
3. THE FENCING SHOULD REMAIN IN GOOD CONDITION FOR THE DURATION OF THE CONSTRUCTION PERIOD.
4. IF EXISTING VEGETATION IS DAMAGED OR DESTROYED, IT MUST BE REPLACED. TREE REPLACEMENT SHALL BE REQUIRED THAT IS EQUAL TO THE BASAL AREA OF ANY TREES CLEARED WITHOUT AUTHORIZATION WITHIN PROTECTED AREAS. IF IT IS NECESSARY TO CLEAR, REMOVE TREES OR WORK WITHIN PROTECTED AREAS, WRITTEN PERMISSION FROM THE TOWN OF MONTGOMERY MUST BE RECEIVED BEFORE STARTING.

THIS PLAN IS FOR EROSION CONTROL PURPOSES ONLY.

SILT FENCE
STORM INLET SEDIMENT TRAP
STABILIZED CONSTRUCTION ENTRANCE
S.P. STOCKPILE LOCATION
STAGING AREA
TEMPORARY SWALE
STONE OUTLET SEDIMENT TRAP

DRAWING LEGEND

PLAN NORTH

30 0 30 60
SCALE IN FEET (1"=30')

Rev.	DATE	DRAWN BY	DESCRIPTION

UNAUTHORIZED ALTERATION TO A MAP BEARING A LICENSED PROFESSIONAL ENGINEER'S SEAL IS A VIOLATION OF SECTION 7209, SUB-DIVISION 2, OF THE NEW YORK STATE EDUCATION LAW. THE CERTIFICATION IS NOT AN EXPRESS OR IMPLIED WARRANTY OR GUARANTEE. IT IS PURELY A STATEMENT OF PROFESSIONAL OPINION BASED ON KNOWLEDGE, INFORMATION AND BELIEF, BASED ON EXISTING FIELD EVIDENCE AND DOCUMENTARY EVIDENCE AVAILABLE. CERTIFICATIONS ARE NOT TRANSFERABLE TO ADDITIONAL INSTITUTIONS OR SUBSEQUENT OWNERS.

ANDREW B. FETHERSTON
NEW YORK STATE PROFESSIONAL ENGINEER LIC. NO. 073555

MASER CONSULTING P.A.
Consulting, Municipal & Environmental Engineers
Planners • Surveyors • Landscape Architects
State of N.Y. Certificate of Authorization: 0000172
New Jersey New York Pennsylvania Virginia
Customer Loyalty through Client Satisfaction

COPYRIGHT ©2014, MASER CONSULTING P.A
ALL RIGHTS RESERVED
THIS DRAWING AND ALL THE INFORMATION CONTAINED HEREIN IS AUTHORIZED FOR USE ONLY BY THE PARTY FOR WHOM THE WORK WAS CONTRACTED OR TO WHOM IT IS CERTIFIED. THIS DRAWING MAY NOT BE COPIED, REUSED, DISCLOSED, DISTRIBUTED OR RELIED UPON FOR ANY OTHER PURPOSE WITHOUT THE EXPRESS WRITTEN CONSENT OF MASER CONSULTING, P.A.

NEWBURGH OFFICE
1607 Route 300
Suite 101
Newburgh, NY 12550
Phone: 845.564.4495
Fax: 845.564.0278
email: solutions @ maserconsulting.com

HUDSON VALLEY PERSONNEL SUPPORT CENTER OF JEHOVAH'S WITNESSES

EROSION & SEDIMENT CONTROL PLAN
FOR
WATCHTOWER BIBLE & TRACT SOCIETY OF NEW YORK, INC.
TAX LOTS 97-2-30.1, 30.22 & 33
TOWN OF NEWBURGH ORANGE COUNTY N.Y.

SCALE:	DATE:	DRAWN BY:	CHECKED BY:
1"=30'	11/21/14	JJS	ABF

PROJECT NUMBER: 13000398C

SHEET NUMBER: 4 of 9

GENERAL PLAN NOTES

1. THIS PLAN IS TO BE USED FOR LANDSCAPE PURPOSES ONLY.

LANDSCAPE NOTES

1. THESE PLANS ARE TO BE USED FOR LANDSCAPE PURPOSES ONLY. REFER TO SHEET 7 FOR GENERAL LANDSCAPE NOTES.
2. LOCATIONS OF ALL PLANT MATERIAL AND PLANTING BED OUTLINES IS APPROXIMATE AND MAY VARY DUE TO FINAL THE LOCATIONS OF SITE IMPROVEMENTS AND/OR BUILDING.
3. FINAL LOCATION OF ALL PLANT MATERIAL AND PLANTING BED OUTLINES SHALL BE DETERMINED IN THE FIELD UNDER THE DIRECTION OF THE LANDSCAPE ARCHITECT.
4. ALL AREAS WITHIN THE PLANTING BED LIMITS SHALL BE MULCHED WITH 3" OF SHREDDED HARDWOOD BARK.
5. ALL LAWN AREAS SHALL BE STABILIZED WITH SEED.
6. MAINTAINED LAWN AREAS WILL BE IRRIGATED WITH AN AUTOMATIC IN-GROUND IRRIGATION SYSTEM AS REQUIRED. EXTENT OF COVERAGE AND ACTUAL CONFIGURATION OF THE SYSTEM WILL BE DETERMINED IN THE FIELD BY THE IRRIGATION CONTRACTOR.
7. ALL PLANT MATERIAL SHALL CONFORM TO GUIDELINES AS SET FORTH IN THE LATEST EDITION OF THE AMERICAN ASSOCIATION OF NURSERYMENS STANDARD FOR NURSERY STOCK.
8. NO SUBSTITUTIONS OF PLANT MATERIALS SHALL BE MADE WITHOUT WRITTEN CONSENT FROM THE LANDSCAPE CONSULTANT FOR THE TOWN OF NEWBURGH.
9. THE OWNER SHALL ENTER INTO A COMPREHENSIVE MAINTENANCE PLAN AGREEMENT WITH A LANDSCAPE CONTRACTOR FOR THE TURF AND PLANTING AREAS. THE MAINTENANCE PLAN SHALL INCLUDE WATERING, MOWING, FERTILIZING, PRUNING, MULCHING AND OTHER ACTIVITIES AS NECESSARY TO MAINTAIN THESE AREAS IN LIVING AND HEALTHY CONDITION. SEASONAL PLANTING OF ANNUALS, AND SEMIANNUAL REPLACEMENT OF TREES AND OTHER PLANTED VEGETATION THAT DO NOT SURVIVE. ALL PLANTS SHALL BE TRIMMED AND PRUNED, GRASS AREAS MOWED, MULCH AREAS RE-MULCHED AS REQUIRED AND ALL DEAD TREES, SHRUBS, BUSHES AND THE LIKE REPLACED PROMPTLY. ALL BARREN AREAS SHALL BE RESEEDED. THE OWNER AND/OR SITE MANAGER SHALL RETAIN THE SERVICES OF A PROFESSIONAL LANDSCAPER TO MAINTAIN ALL LANDSCAPED AREAS AS APPROVED ON THE SITE PLAN AND SHALL PROVIDE A COPY OF THE CONTRACT TO THE BUILDING DEPARTMENT ANNUALLY OR WHENEVER THE RENEWAL PERIOD SPECIFIED IN THE SERVICE AGREEMENT EXPIRES.

SITE PLANT SCHEDULE

KEY	QTY.	BOTANICAL NAME	COMMON NAME	HEIGHT	CALIPER	SPREAD	ROOT	REMARKS	SPACING
SHADE TREES									
AROG	7	ACER RUBRUM 'OCTOBER GLORY'	OCTOBER GLORY RED MAPLE		2 1/2" - 3"		B & B	STRAIGHT LEADER/FULL BRANCHING	
FPP	3	FRAXINUS PENNSYLVANICA 'PATMORE'	GREEN ASH		2 1/2" - 3"		B & B	STRAIGHT LEADER/FULL BRANCHING	
TCG	3	TILIA CORDATA 'GREENSPIRE'	GREENSPIRE LITTLELEAF LINDEN		2 1/2" - 3"		B & B	STRAIGHT LEADER/FULL BRANCHING	
* ZSGV	4	ZELKOVA SERRATA 'GREEN VASE'	GREEN VASE ZELKOVA		3 1/2" - 3"		B & B	STRAIGHT LEADER/FULL BRANCHING	
EVERGREEN TREES									
PA	3	PICEA ABIES	NORWAY SPRUCE	6 - 7'			B & B	SHEARED/MATCHED	
PS	3	PICEA GLAUCA	WHITE PINE	6 - 7'			B & B	SHEARED/MATCHED	
ORNAMENTAL TREES									
BW	1	BETULA NIGRA 'HERITAGE'	HERITAGE RIVER BIRCH	8 - 10'			B & B	CLUMP/FULL HEAD	
CVW	7	CRATAEGUS VIRIDIS 'WINTER KING'	WINTER KING HAWTHORN		1-3/4" - 2"		B & B	SINGLE LEADER/FULL HEAD	
PCT	2	PRUNUS CERASIFERA 'THUNDERCLOUD'	THUNDERCLOUD PLUM		1-3/4" - 2"		B & B	SINGLE LEADER/FULL HEAD	
PSC	2	PRUNUS SARGENTII 'COLUMNARIS'	COLUMN SARGENT'S CHERRY		1-3/4" - 2"		B & B	SINGLE LEADER/FULL HEAD	
SHRUBS									
BMWG	30	BUXUS MICROPHYLLA 'WINTER GEM'	WINTER GEM BOXWOOD	24 - 30"			CONT.	TYPICAL SPECIMEN HABIT	
CAB	19	CORNUS ALBA 'IBORNINO'	IVORY HALO DOGWOOD	30 - 36"			CONT.	TYPICAL SPECIMEN HABIT	
HPL	6	HYPERICUM X 'HIDCOTE'	HIDCOTE ST. JOHN'S WORT	24 - 30"			CONT.	TYPICAL SPECIMEN HABIT	
HPK	18	HYDRANGEA PANICULATA 'LINDLEY'	LINDLEY HYDRANGEA	30 - 36"			CONT.	TYPICAL SPECIMEN HABIT	
ILX	20	ILEX GLABRA 'SHAMROCK'	SHAMROCK INKBERRY HOLLY	24 - 30"			CONT.	TYPICAL SPECIMEN HABIT	
IVRS	31	ILEX VERTICILLATA 'RED SPRITE'	RED SPRITE WINTERBERRY HOLLY	24 - 30"			CONT.	TYPICAL SPECIMEN HABIT	
JCSG	41	JUNIPERUS CHINENSIS 'SEA GREEN'	SEA GREEN JUNIPER	24 - 30"			CONT.	TYPICAL SPECIMEN HABIT	
KP	13	KNOCKOUT ROSE	P.A. KNOCKOUT ROSE	24 - 30"			CONT.	TYPICAL SPECIMEN HABIT	
SBAW	11	SPIREA X SUMULDA 'ANTHONY WATERER'	ANTHONY WATERER SPIREA	24 - 30"			CONT.	TYPICAL SPECIMEN HABIT	
SHW	2	SALIX INTEGRA 'HAKURO NISHIKI'	DAPPLED WILLOW	30 - 36"			CONT.	TYPICAL SPECIMEN HABIT	
SJS	8	SPIREA JAPONICA 'SHIROBANA'	SHIROBANA SPIREA	18 - 24"			CONT.	TYPICAL SPECIMEN HABIT	
PERENNIALS									
Hex	7	HEMEROCALLIS 'STELLA DE ORO'	STELLA DE ORO DAYLILY				1 GAL. CONT.	CLUMPS	24" O.C.

* PLANT MATERIAL RECOMMENDED TO BE INSTALLED DURING SPRING PLANTING SEASON DUE TO FALL PLANTING HAZARD.

BIO-FILTRATION PLANT SCHEDULE

KEY	QTY.	BOTANICAL NAME	COMMON NAME	HEIGHT	CALIPER	SPREAD	ROOT	REMARKS	SPACING
ORNAMENTAL TREES									
AC	2	AMELANCHIER CANADENSIS	SHADBLOW SERVICEBERRY	8 - 10'			B & B	CLUMP/FULL HEAD	
SHRUBS									
AA	6	ARONIA ARBUTIFOLIA	RED CHOKEBERRY	24 - 30"			CONT.	TYPICAL SPECIMEN HABIT	
CAP	6	CLETHRA ALNIFOLIA 'RUBYSPICE'	SUMMERSWEET	18 - 24"			CONT.	TYPICAL SPECIMEN HABIT	
CA	1	CORNUS AMOMUM	SILKY DOGWOOD	24 - 30"			CONT.	TYPICAL SPECIMEN HABIT	
SC	5	SAMBUCUS CANADENSIS	ELDERBERRY	24 - 30"			CONT.	TYPICAL SPECIMEN HABIT	
VD	6	VIBURNUM DENTATUM	ARROWWOOD VIBURNUM	30 - 36"			CONT.	TYPICAL SPECIMEN HABIT	
PERENNIALS									
DC	72	DESCHAMPSIA CAESPITOSA	TUFTED HAIRGRASS				#1 CONT.	CLUMPS	30" O.C.
EP	19	ECHINACEA PURPUREA	CONEFLOWER				#1 CONT.	CLUMPS	30" O.C.
MSV	3	MISCANTHUS SINENSIS 'VARIEGATUS'	VARIEGATED MAIDEN GRASS				#2 CONT.	CLUMPS	36" O.C.
RH	27	RUDBECKIA HIRTA	BLACK-EYED SUSAN				#1 CONT.	CLUMPS	18" O.C.

PLANTING DETAIL NOTES

1. NO SOIL OR MULCH SHALL BE PLACED AGAINST ROOT COLLAR OF PLANT. MULCH SHALL NOT TOUCH THE TREE TRUNK.
2. PLANTING DEPTH SHALL BE THE SAME OR HIGHER AS GROWN IN NURSERY.
3. WIRE BASKETS AND NON-JUTE BURLAP MUST BE ENTIRELY REMOVED FROM THE ROOT BALL. JUTE BURLAP MUST BE REMOVED FROM THE TOP 1/3 OF THE ROOT BALL.
4. CONTRACTOR SHALL PARTIALLY FILL WITH WATER A REPRESENTATIVE NUMBER OF PITS IN EACH AREA OF THE PROJECT PRIOR TO PLANTING TO DETERMINE IF THERE IS ADEQUATE PERCOLATION. IF PIT DOESN'T PERCOLATE, MEASURES MUST BE TAKEN TO ASSURE PROPER DRAINAGE BEFORE PLANTING. AT A MINIMUM THE DEPTH OF THE PLANT PIT SHALL BE INCREASED BY 12" WHEREVER POOR SOIL CONDITIONS OCCUR, WITH THE ADDITION OF LOOSE AGGREGATE.
5. PLANTING MUST BE GUARANTEED FOR TWO FULL GROWING SEASONS FROM THE TIME OF FINAL ACCEPTANCE BY THE TOWN OF BETHEL. CONTRACTOR SHALL REMOVE WRAPPING AT THE END OF GUARANTEE PERIOD.
6. PRUNE DAMAGED AND CONFLICTING BRANCHES MAINTAINING NORMAL TREE SHAPE. NEVER CUT CENTRAL TRUNK OR LEADER.

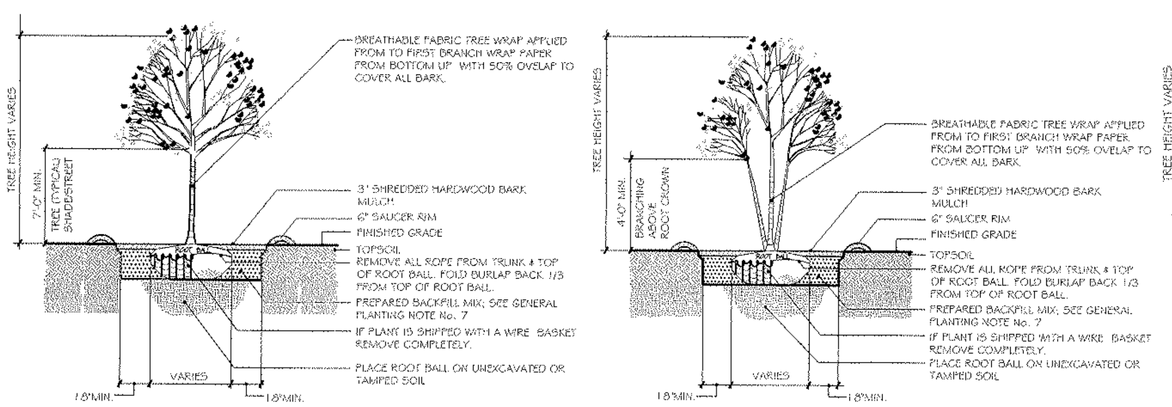

DECIDUOUS TREE PLANTING DETAIL
NOT TO SCALE

MULTI-STEM TREE PLANTING DETAIL
NOT TO SCALE

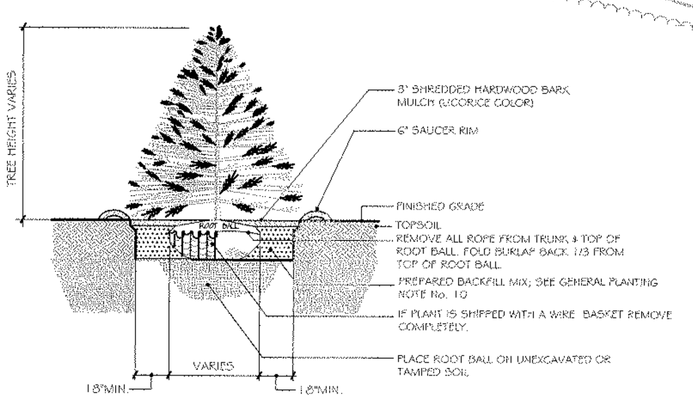

EVERGREEN TREE PLANTING DETAIL
NOT TO SCALE

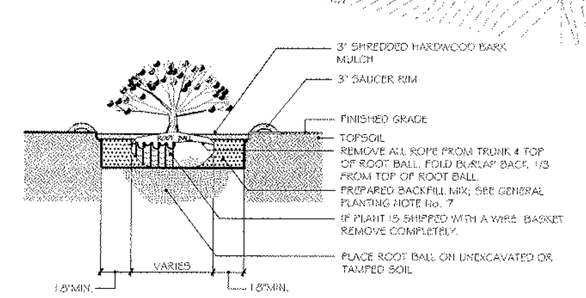

SHRUB PLANTING DETAIL
NOT TO SCALE

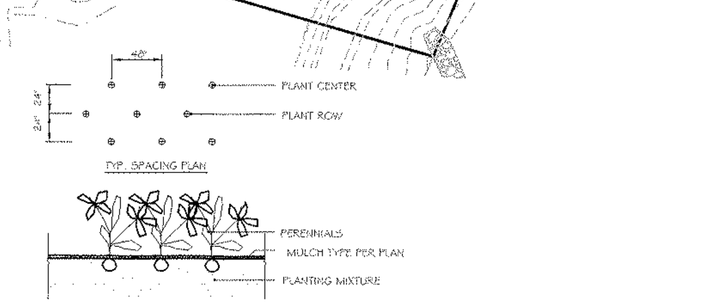

PERENNIAL / GRASS PLANTING
NOT TO SCALE

THIS PLAN TO BE UTILIZED FOR LANDSCAPE PURPOSES ONLY.

PROPOSED SHADE/STREET TREE
PROPOSED ORNAMENTAL TREE
PROPOSED EVERGREEN TREE
PROPOSED SHRUB
PERENNIAL FLOWERS
OUTLINE OF CONTINUOUS HARDWOOD BARK MULCH PLANTING BED

DRAWING LEGEND

PLAN NORTH

30 0 30 60
SCALE IN FEET (1"=30')

Rev.	DATE	DRAWN BY	DESCRIPTION

UNAUTHORIZED ALTERATION TO A MAP BEARING A LICENSED PROFESSIONAL ENGINEER'S SEAL IS A VIOLATION OF SECTION 7209 OF THE NEW YORK STATE EDUCATION LAW. THE CERTIFICATION IS NOT AN EXPRESS OR IMPLIED WARRANTY OR GUARANTEE. IT IS ONLY A STATEMENT OF PROFESSIONAL OPINION BASED ON KNOWLEDGE, INFORMATION AND BELIEF BASED ON EXISTING FIELD EVIDENCE, DOCUMENTARY EVIDENCE AVAILABLE, COMPETENCY AND JUDGMENT. TRANSFERABLE TO OTHERS FOR THE PURPOSE OF SUBSEQUENT OWNERSHIP.

ANDREW B. FETHERSTON
NEW YORK STATE PROFESSIONAL ENGINEER LIC. NO. 073555

MASER CONSULTING P.A.
Consulting, Municipal & Environmental Engineers
Planners * Surveyors * Landscape Architects
State of N.Y. Certificate of Authorization: 0000172
New Jersey New York Pennsylvania Virginia
Customer Loyalty through Client Satisfaction

COPYRIGHT ©2014, MASER CONSULTING P.A
ALL RIGHTS RESERVED
THIS DRAWING AND ALL THE INFORMATION CONTAINED HEREON IS AUTHORIZED FOR USE ONLY BY THE PARTY FOR WHOM THE WORK WAS CONTRACTED OR TO WHOM IT IS CERTIFIED. IT MAY NOT BE COPIED, REVISED, PARTITIONED, DISCLOSED, DISTRIBUTED OR RELIED UPON FOR ANY OTHER PURPOSE WITHOUT THE EXPRESS WRITTEN CONSENT OF MASER CONSULTING, P.A.

NEWBURGH OFFICE
1507 Route 300
Suite 101
Newburgh, NY 12550
Phone: 845.564.4495
Fax: 845.564.0278
email: solutions @ maserconsulting.com

HUDSON VALLEY PERSONNEL SUPPORT CENTER OF JEHOVAH'S WITNESSES

LANDSCAPE PLAN

FOR

WATCHTOWER BIBLE & TRACT SOCIETY OF NEW YORK, INC.

TAX LOTS 97-2-30.1, 30.22 & 33

TOWN OF NEWBURGH ORANGE COUNTY N.Y.

SCALE:	DATE:	DRAWN BY:	CHECKED BY:
1"=30'	11/21/14	JED	ABF

PROJECT NUMBER: 13000398C

SHEET NUMBER: 5 of 9

GENERAL PLAN NOTES:

1. THIS PLAN IS TO BE USED FOR LIGHTING PURPOSES ONLY.

LIGHTING NOTES:

1. TYPICAL POLES, LUMINAIRES AND FIXTURES AS SUPPLIED BY SPAULDING LIGHTING.
2. LAMPS ARE TO BE PULSE START METAL HALIDE. A LIGHT LOSS FACTOR OF 0.72 WAS USED.
3. LUMINARES AND POLES ARE TO BE DARK BRONZE.
4. POLE MOUNTED FIXTURES SHALL BE PLACED A MINIMUM OF THREE (3) FEET BEHIND CURBS OR RETAINING WALLS IN CAR PARKING AREAS.
5. POLE LOCATIONS ARE APPROXIMATE AND MAY VARY DUE TO SPECIFIC SITE CONDITIONS. THE LIGHTING CONTRACTOR SHALL FIELD VERIFY POLE LOCATIONS IN ORDER TO ACCOMMODATE FINAL CONSTRUCTION OF UTILITIES AND PAVEMENT.
6. POLE SIZES TO BE CONFIRMED WITH MANUFACTURER.
7. LIGHTING SHOWN ON PLAN DEPICTS AVERAGE MAINTAINED FOOTCANDLE LEVELS AT GRADE.
8. CONTRACTOR TO PROVIDE SHOP DRAWINGS OF LIGHT FIXTURES FOR REVIEW AND APPROVAL BY THE PROJECT LANDSCAPE ARCHITECT.
9. ELECTRICAL PLANS FOR WIRING LAYOUT BY OTHERS.
10. SEE FINAL ARCHITECTURAL PLANS FOR CANOPY AND WALL MOUNTED FIXTURES IN THE VICINITY OF THE BUILDING ACCESS POINTS.

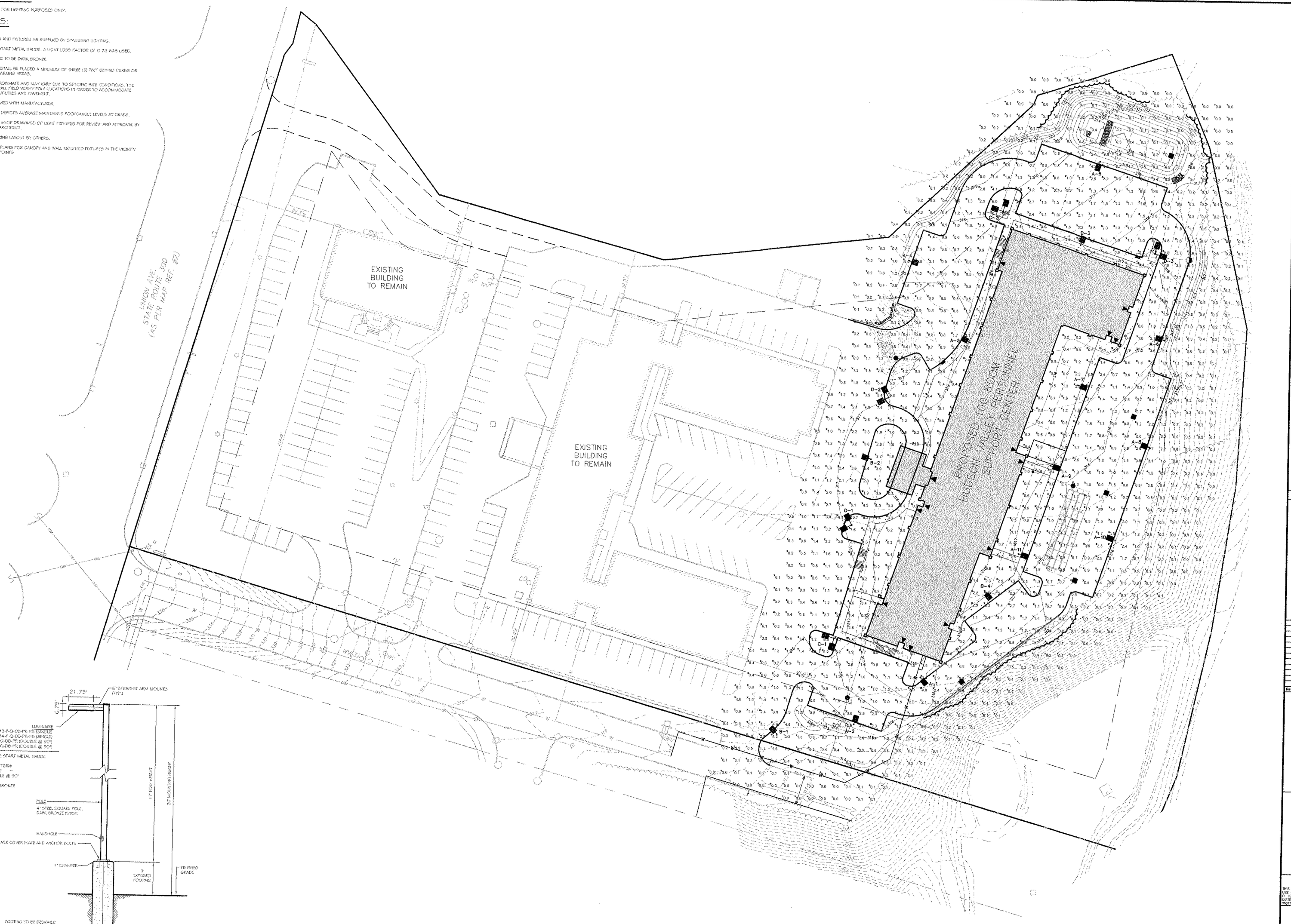

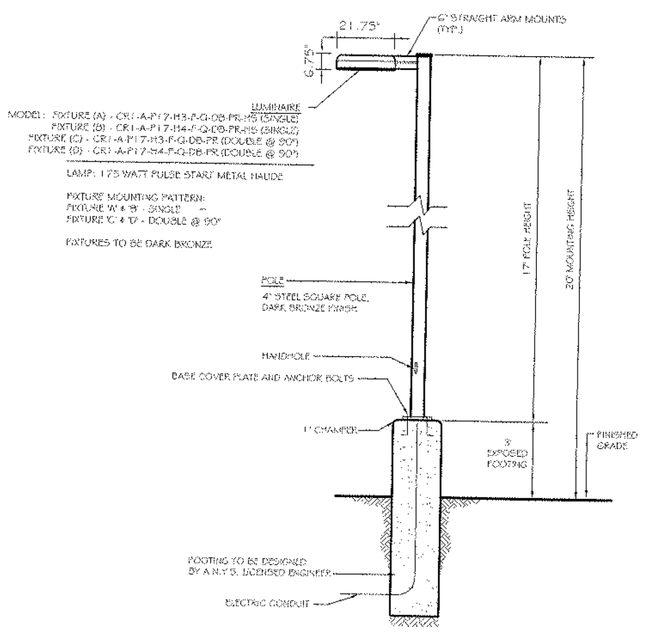

POLE MOUNTED FIXTURE DETAIL - FIXTURES A, B, C & D

NOT TO SCALE

NOTES:

1. LUMINAIRES AND POLE TO BE MANUFACTURED BY SPAULDING LIGHTING.
2. CONTRACTOR TO PROVIDE SHOP DRAWINGS OF LIGHT FIXTURES FOR REVIEW AND APPROVAL BY THE OWNER OR PROJECT LANDSCAPE ARCHITECT.
3. FOOTING TO BE DESIGNED, SIGNED, AND SEALED BY A NYS LICENSED ENGINEER.
4. * - VOLTAGE TO BE PROVIDED BY ELECTRICIAN.

LUMINAIRE SCHEDULE

KEY	QTY.	DESCRIPTION	ARRANGEMENT	MTG. HT.	LUMENS	LLF	IES FILE NAME	CATALOG #
A	11	SPAULDING LIGHTING CIMARRON PULSE START MH	SINGLE	20'	13,500	0.72	CR1-P17-H3	CR1-A-P17-H3-F-Q-DB-PR-HS
B	4	SPAULDING LIGHTING CIMARRON PULSE START MH	SINGLE	20'	13,500	0.72	CR1-P17-H4	CR1-A-P17-H4-F-Q-DB-PR-HS
C	2	SPAULDING LIGHTING CIMARRON PULSE START MH	DOUBLE - 90°	20'	13,500	0.72	CR1-P17-H3	CR1-A-P17-H3-F-Q-DB-PR
D	3	SPAULDING LIGHTING CIMARRON PULSE START MH	DOUBLE - 90°	20'	13,500	0.72	CR1-P17-H4	CR1-A-P17-H4-F-Q-DB-PR

CALCULATION SUMMARY			
AREA	CALC TYPE	UNITS	AVG
PARKING AREAS	ILLUMINANCE	Fc	1.6

THIS PLAN TO BE UTILIZED FOR LIGHTING PURPOSES ONLY.

SINGLE POLE MOUNTED FIXTURE

DOUBLE POLE MOUNTED FIXTURE

+ 0.7 LIGHT INTENSITY AT GRADE

DRAWING LEGEND

PLAN NORTH

30 0 30 60

SCALE IN FEET (1"=30')

Rev.	DATE	DRAWN BY	DESCRIPTION

UNAUTHORIZED ALTERATION TO A MAP BEARING A LICENSED PROFESSIONAL ENGINEER'S SEAL IS A VIOLATION OF SECTION 7209, SUB-DIVISION 2, OF THE NEW YORK STATE EDUCATION LAW. THE CERTIFICATION, IF GIVEN, EXPRESS OR IMPLIED WARRANTY OR GUARANTEE. IT IS ONLY A STATEMENT OF PROFESSIONAL OPINION BASED ON KNOWLEDGE, INFORMATION AND BELIEF, BASED ON EXISTING FIELD EVIDENCE AND DOCUMENTARY EVIDENCE AVAILABLE. OBSERVATIONS ARE NOT TRANSFERABLE TO SUBSEQUENT PURCHASERS OR SUBSEQUENT OWNERS.

ANDREW B. FETHERSTON
NEW YORK STATE LICENSED PROFESSIONAL ENGINEER
NO. 073595

MASER CONSULTING P.A.
Consulting, Municipal & Environmental Engineers
Planners * Surveyors * Landscape Architects
State of N.Y. Certificate of Authorization: 000072

New Jersey New York Pennsylvania Virginia
Customer Loyalty through Client Satisfaction

COPYRIGHT ©2014, MASER CONSULTING P.A
ALL RIGHTS RESERVED
THIS DRAWING AND ALL THE INFORMATION CONTAINED HEREIN IS AUTHORIZED FOR USE ONLY BY THE PARTY FOR WHOM THE WORK WAS CONTRACTED OR TO WHOM IT IS CERTIFIED. THIS DRAWING MAY NOT BE COPIED, REUSED, DISCLOSED, DISTRIBUTED OR RELIED UPON FOR ANY OTHER PURPOSE WITHOUT THE EXPRESS WRITTEN CONSENT OF MASER CONSULTING P.A.

NEWBURGH OFFICE
1607 Route 300
Suite 101
Newburgh, NY 12550
Phone: 845.564.4465
Fax: 845.564.0378
email: solutions @ maserconsulting.com

HUDSON VALLEY PERSONNEL SUPPORT CENTER OF JEHOVAH'S WITNESSES

LIGHTING PLAN

FOR

WATCHTOWER BIBLE & TRACT SOCIETY OF NEW YORK, INC.

TAX LOTS 97-2-30.1, 30.22 & 33

TOWN OF NEWBURGH ORANGE COUNTY N.Y.

SCALE:	DATE:	DRAWN BY:	CHECKED BY:
1"=30'	11/21/14	JED	ABF

PROJECT NUMBER: 13000398C

SHEET NUMBER: 6 of 9

CONSTRUCTION NOTES:

1. THE CONTRACTOR SHALL LOCATE AND VERIFY IN THE FIELD ALL UTILITIES -- GAS, WATER, ELECTRICAL BEFORE THE START OF CONSTRUCTION. CONTRACTOR SHALL CALL 1-800-962-7962

2. EROSION CONTROL MEASURES WILL BE REQUIRED AS PER NYSDEC AND THE TOWN OF NEWBURGH.

3. AS BUILT PLANS SHALL BE REQUIRED AND CERTIFIED BY A N.Y. STATE LICENSED PROFESSIONAL SURVEYOR.

4. ALL PROPERTY DISTURBED IN THE R.O.W. OR ON PRIVATE LANDS, SHALL BE RESTORED TO NEW CONDITIONS.

5. THE CONTRACTOR SHALL BE RESPONSIBLE FOR ALL APPLICATIONS AND PERMITS REQUIRED FOR CONSTRUCTION.

6. THE SITE IMPROVEMENTS SHALL BE STAKED IN THE FIELD BY A N.Y. STATE LICENSED SURVEYOR.

7. THE CONTRACTOR IS REPSONSIBLE FOR SAFETY OF THE SITE DURING CONSTRUCTION, THE OWNER IS RESPONSIBLE FOR MAINTAINING A SAFE SITE THROUGH PROPER MAINTENANCE THEREAFTER.

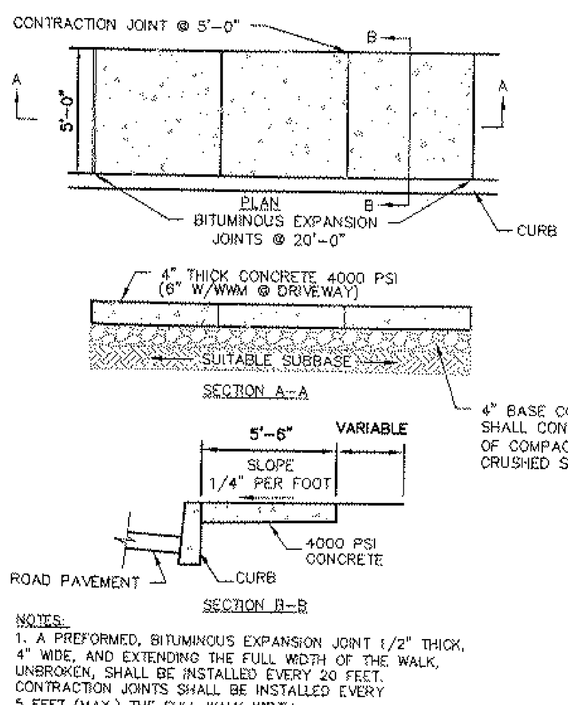

NOTES:
1. A PREFORMED, BITUMINOUS EXPANSION JOINT 1/2" THICK, 4" WIDE, AND EXTENDING THE FULL WIDTH OF THE WALK, UNBROKEN, SHALL BE INSTALLED EVERY 20 FEET. CONTRACTION JOINTS SHALL BE INSTALLED EVERY 5 FEET (MAX.) THE FULL WALK WIDTH.
2. THERE SHALL BE A FLOAT FINISH WITH THE EDGES FINISHED WITH A SUITABLE TOOL.
3. DIMENSIONS SHOWN AS VARIABLE SHALL BE CONFIRMED BY THE ENGINEER.

CONCRETE SIDEWALK
N.T.S.

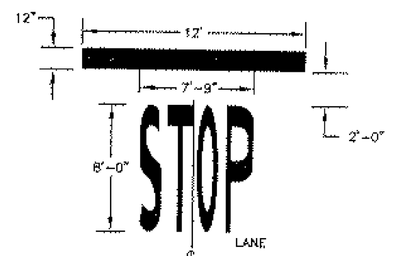

PAINTED STOP BAR
N.T.S.

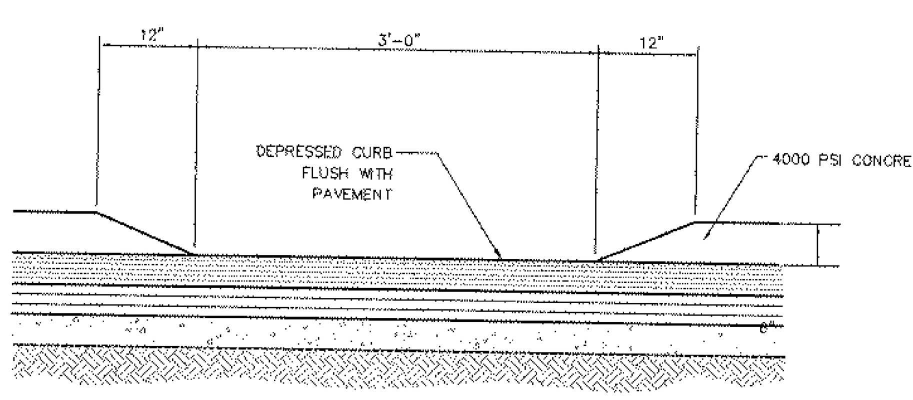

DEPRESSED CURB FOR DRAINAGE FLOW
N.T.S.

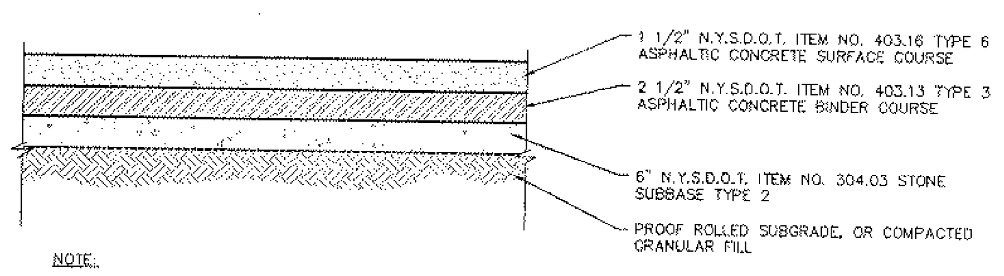

NOTE:
1. THIS PAVEMENT SECTION IS TO BE USED FOR DRIVEWAYS AND PARKING AREAS UNLESS SPECIFICED OTHERWISE ON THE PLANS.
2. MATERIALS AND METHODS OF CONSTRUCTION SHALL BE IN CONFORMANCE WITH LATEST EDITION OF THE NEW YORK STATE DEPARTMENT OF TRANSPORTATION (N.Y.S.D.O.T.) STANDARD SPECIFICATIONS FOR CONSTRUCTION AND MATERIALS.
3. SEE PLAN FOR SITE SPECIFIC CROSS SLOPES.

PAVEMENT SECTION
N.T.S.

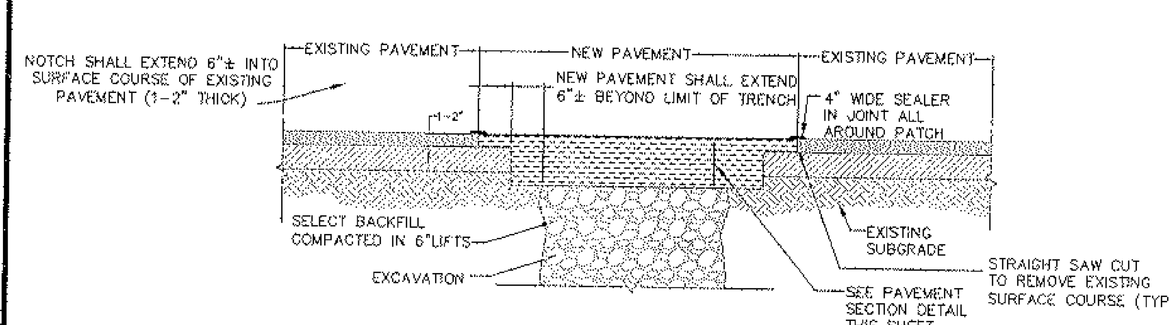

PAVEMENT OPENING REPAIR DETAIL
N.T.S.

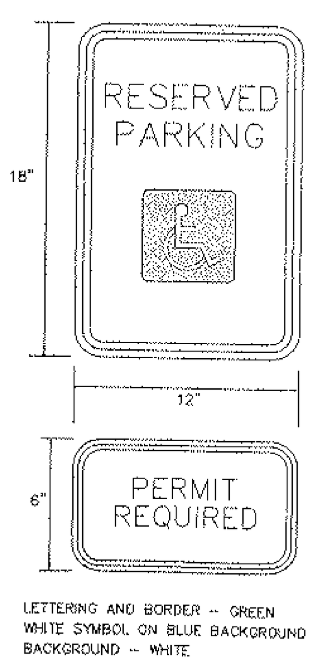

SIGN FOR ACCESSIBLE PARKING SPACE
N.T.S.

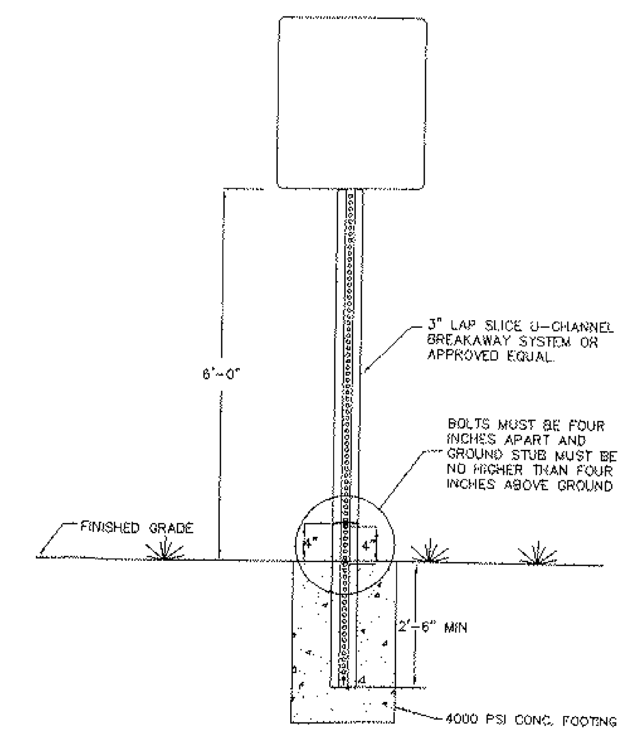

BREAKAWAY SIGN POST DETAIL
N.T.S.

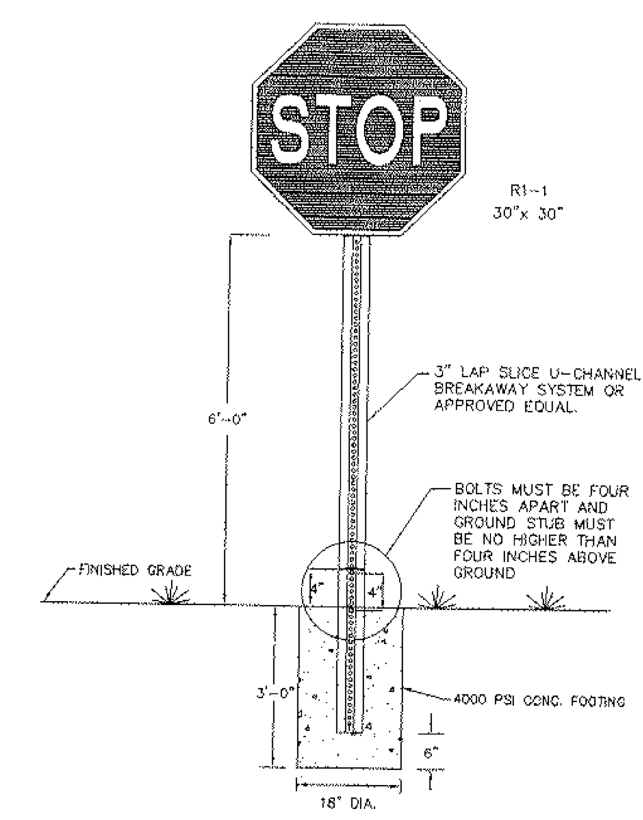

BREAKAWAY STOP SIGN WITH POST DETAIL
N.T.S.

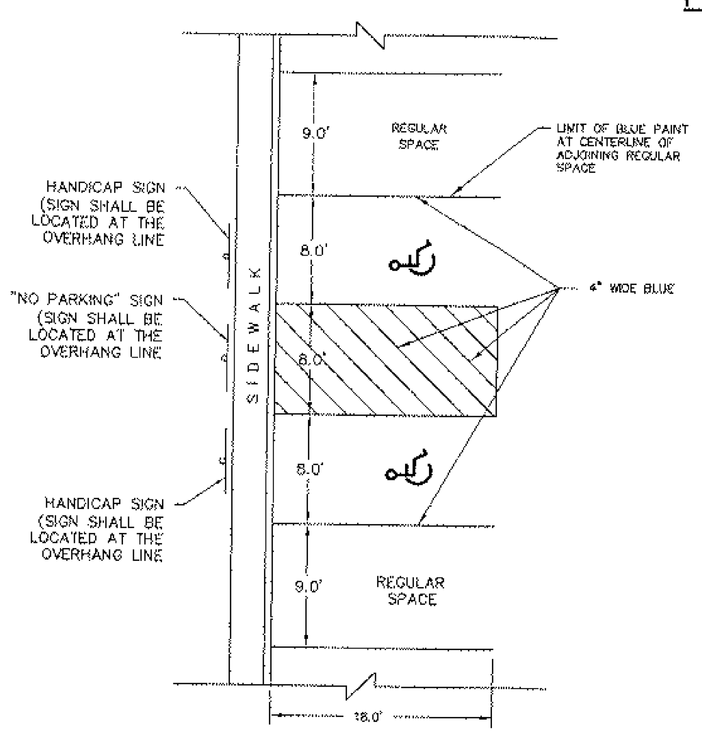

PARKING STALL STRIPING DETAIL
N.T.S.

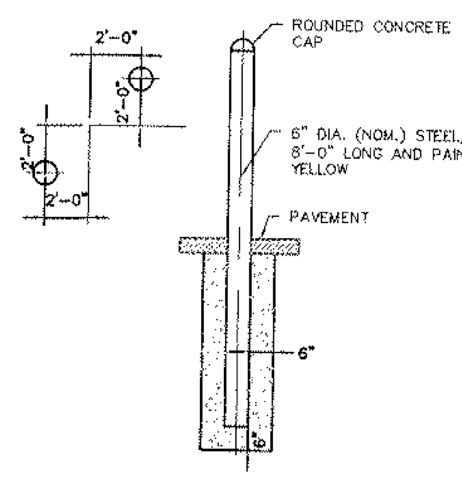

6" BOLLARD
N.T.S.

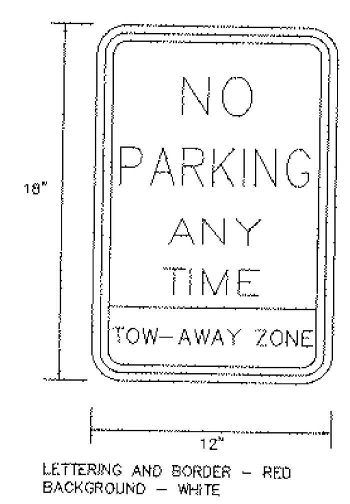

NO PARKING SIGN
N.T.S.

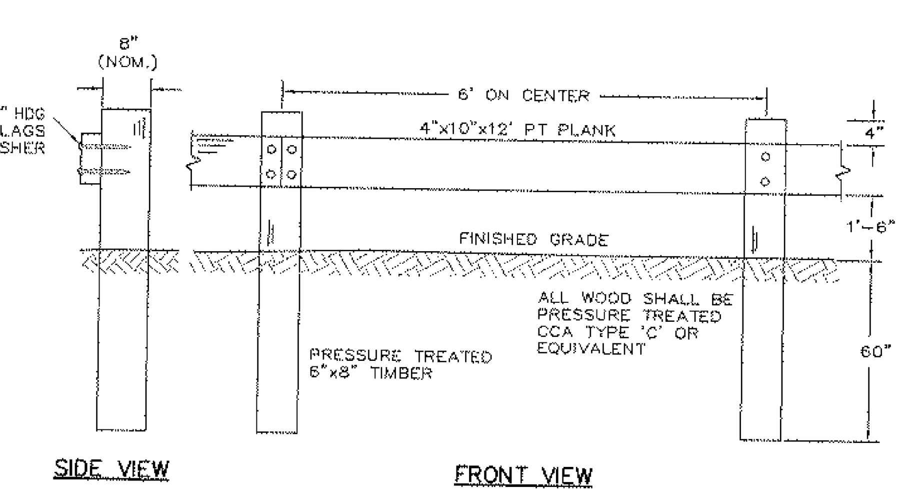

TIMBER GUIDE RAIL
N.T.S.

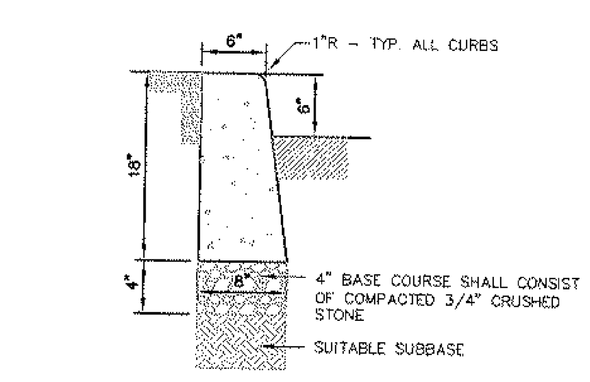

NOTES:
1. CONCRETE TO BE 4000 PSI AIR-ENTRAINED PORTLAND CEMENT CONCRETE
2. SIX (6") INCH FACE TO BE PROVIDED
3. PROVIDE PRE FORMED BITUMINOUS FIBER EXPANSION JOINTS, 1/2" THICK AT 20'-0" (MAX.) INTERVALS. PROVIDE DUMMY JOINTS (FORMED) MIDWAY BETWEEN EXPANSION JOINTS.

CONCRETE CURB
N.T.S.

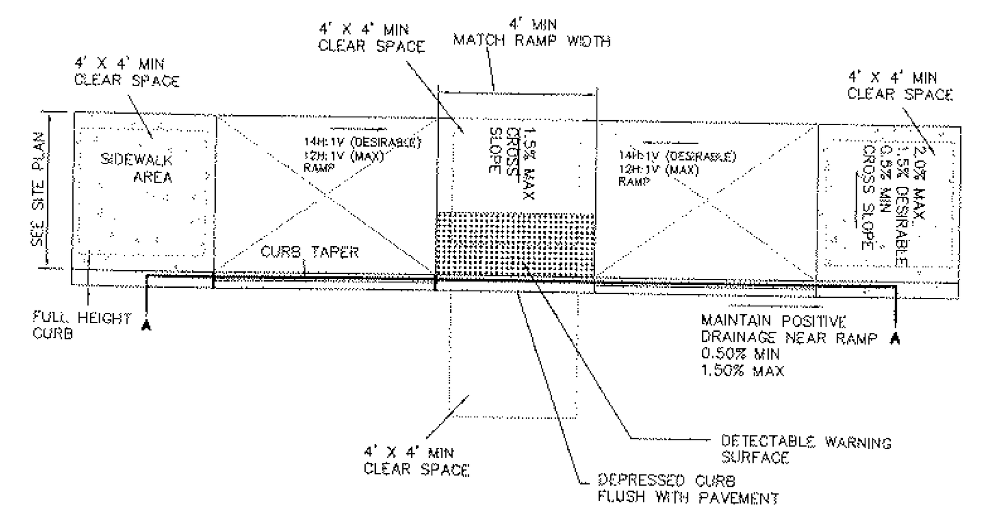

TYPICAL PARALLEL CURB RAMP
N.T.S.

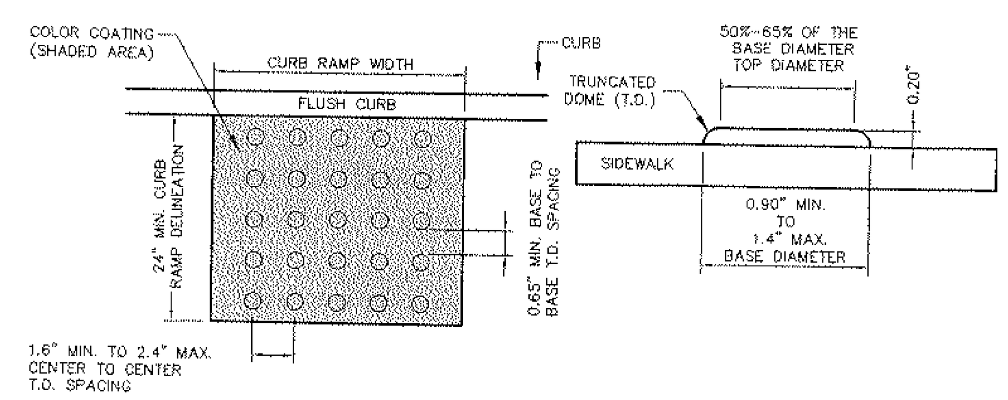

PLAN VIEW ENLARGEMENT TRUNCATED DOME ELEVATION

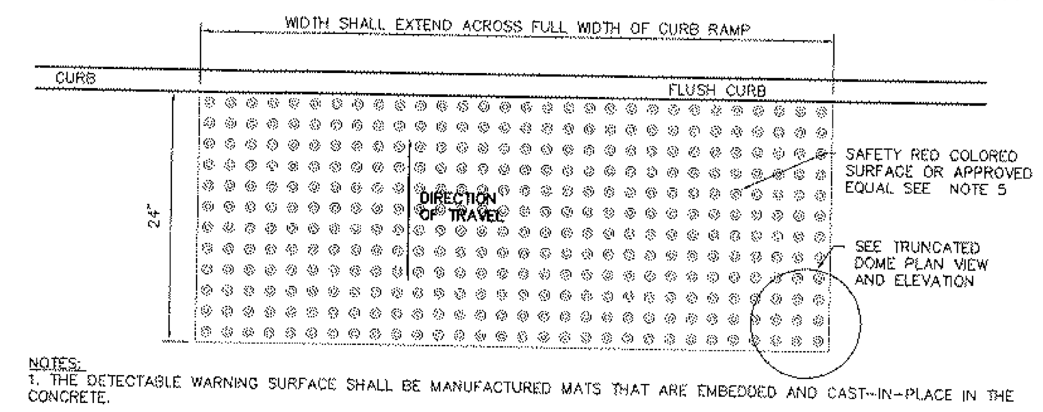

NOTES:
1. THE DETECTABLE WARNING SURFACE SHALL BE MANUFACTURED MATS THAT ARE EMBEDDED AND CAST-IN-PLACE IN THE CONCRETE.

2. IN LIEU OF A CAST IN PLACE DETECTABLE WARNING SURFACE, THE CONTRACTOR MAY UTILIZE A SURFACE APPLIED DETECTABLE WARNING SURFACE WITH PRIOR APPROVAL OF THE UNDERSIGNED ENGINEER AND PRIOR TO POURING OF THE CONCRETE RAMP.

3. THE CONTRACTOR SHALL SUBMIT TO THE ENGINEER A SHOP DRAWING OF THE DETECTABLE WARNING SURFACE PRIOR TO CONSTRUCTION FOR APPROVAL.

4. THE CONTRACTOR SHALL PROVIDE A MANUFACTURER CERTIFICATION THAT THE DETECTABLE WARNING SURFACE COMPLIES WITH THE CURRENT ADA STANDARDS FOR ACCESSIBLE DESIGN AS PUBLISHED BY THE DEPARTMENT OF JUSTICE AND THE ADA STANDARDS AS SUPPORTED BY THE UNITED STATES ACCESS BOARD, AND THE STATE AND/OR LOCAL ADA STANDARDS.

5. SAFETY RED SHALL BE APPROVED BY THE LOCAL JURSIDCTION PRIOR TO INSTALLATION. DETECTABLE WARNING SURFACES SHALL CONTRAST VISUALLY WITH ADJACENT WALKING SURFACES EITHER LIGHT-ON-DARK, OR DARK-ON-LIGHT. ALTERNATIVE COLOR MAY BE USED PROVIDED SUCH COLOR COMPLIES WITH CURRENT ADA STANDARDS.

6. DETECTABLE WARNINGS SHALL CONSIST OF A SURFACE OF TRUNCATED DOMES AND SHALL COMPLY DETECTABLE WARNINGS.

7. TRUNCATED DOMES IN A DETECTABLE WARNING SURFACE SHALL HAVE A BASE DIAMETER OF 0.9 INCH (23 mm) MINIMUM AND 1.4 INCHES (36 mm) MAXIMUM, A TOP DIAMETER OF 50 PERCENT OF THE BASE DIAMETER MINIMUM TO 65 PERCENT OF THE BASE DIAMETER MAXIMUM, AND A HEIGHT OF 0.2 INCH (5.1 mm).

8. TRUNCATED DOMES IN DETECTABLE WARNING SURFACE SHALL HAVE A CENTER-TO-CENTER SPACING OF 1.6 INCHES (41 mm) MINIMUM AND 2.4 INCHES (61 mm) MAXIMUM, AND A BASE-TO-BASE SPACING OF 0.65 INCH (17 mm) MINIMUM, MEASURED BETWEEN THEY MOST ADJACENT DOMES ON A SQUARE GRID.

DETECTABLE WARNING SURFACE
N.T.S.

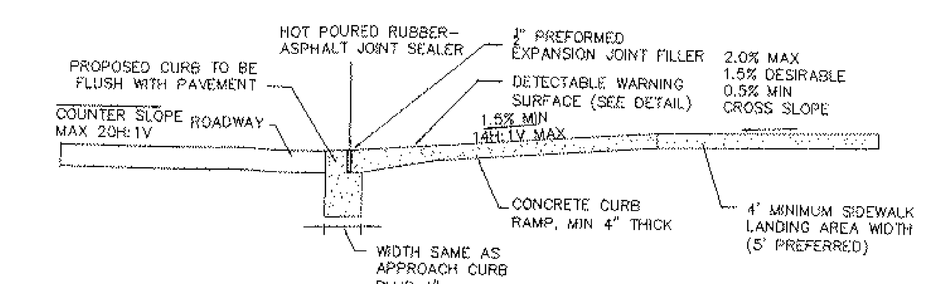

CURB RAMP SECTION B-B
N.T.S.

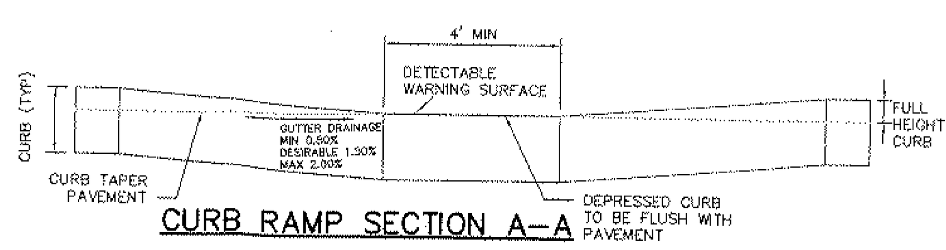

CURB RAMP SECTION A-A
N.T.S.

NOTES:
1. DEPRESSED CURB AT DETECTABLE WARNING SHALL BE A SMOOTH LEVEL SURFACE THAT IS FLUSH WITH THE ADJOINING PAVEMENT. NO BUMPS OR ROUGH SURFACE ARE ALLOWED. SUCH UNEVENNESS SHALL BE MILLED OR GRINDER SMOOTH.

2. POSITIVE DRAINAGE SHALL BE MAINTAINED AT RAMP. RAMP SHALL SLOPE TOWARDS PAVEMENT NO PONDING OF WATER IS PERMITTED AT CURB RAMP. PAVEMENT GRADES TO BE ADJUSTED AS NECESSARY TO PROVIDE POSITIVE DRAINAGE.

3.CURB (DROPPED CURB) GUTTER-LINE TO BE FLUSH WITH ROADWAY PAVEMENT.

4. MAXIMUM GUTTER DRAINAGE GRADE MAY BE INCREASED TO 2.00% UPON THE WRITTEN APPROVAL OF THE UNDERSIGNED PROFESSIONAL.

5. DEVIATION FROM THIS DETAIL REQUIRES THE WRITTEN APPROVAL OF THE UNDERSIGNED PROFESSIONAL.

CURB RAMP NOTES:
1. THE CONTRACTOR SHALL PREPARE SHOP DRAWINGS OF EACH CURB RAMP FOR SUBMISSION AND APPROVAL OF THE UNDERSIGNED PROFESSIONAL AND THE MUNICIPAL, COUNTY, STATE OR OTHER AGENCY'S ENGINEER HAVING JURISDICTION.

2. LANDING AREA, APPROACH SIDEWALK TRANSITIONS AND CURB RAMP SHALL BE KEPT CLEAR OF OBSTRUCTIONS.

3. CURB (DROPPED CURB) GUTTER-LINE TO BE FLUSH WITH ROADWAY PAVEMENT.

4. CROSSWALKS AND PAVEMENT MARKINGS TO BE INSTALLED AS DENOTED ON SITE PLAN.

5. MAXIMUM RAMP SLOPE MAY BE 12H:1V UPON APPROVAL OF ENGINEER. RAMP SLOPES SHOWN ARE THE PREFERRED SLOPE. SIDE FLARE SLOPES MAY BE 10H:1V UPON THE APPROVAL OF THE ENGINEER.

6. MINIMUM RAMP CROSS-SLOPE SHALL BE 0.50% OR THE MAXIMUM RAMP CROSS-SLOPE MAY BE 2.00% UPON APPROVAL OF THE ENGINEER. CROSS-SLOPES SHOWN IN THE DETAILS ARE THE PREFERRED SLOPE MAINTAIN A LEVEL OF CONSTRUCTION TOLERANCE.

7. ACCESSIBLE RAMPS SHALL BE INSTALLED PURSUANT WITH THE CURRENT UNITED STATES ACCESS BOARD ACCESSIBILITY GUIDELINES FOR PEDESTRIAN FACILITIES AND THE ADA STANDARDS FOR ACCESSIBLE DESIGN AS PUBLISHED BY THE UNITED STATES DEPARTMENT OF JUSTICE AND OTHER APPLICABLE LOCAL AND STATE STANDARDS IN EFFECT AT THE DATE OF CONSTRUCTION.

8. DEVIATION FROM THE CURB RAMP DETAIL REQUIRES THE WRITTEN APPROVAL OF THE UNDERSIGNED PROFESSIONAL AND THE MUNICIPAL, COUNTY, STATE OR OTHER AGENCY'S ENGINEER HAVING JURISDICTION.

9. THE RAMP SURFACE SHALL BE A NON-SLIP, HAND BROOMED FINAL FINISH OF CONCRETE SURFACES.

10. CONCRETE EXPANSIONS JOINTS SHALL BE FIRM SURFACES, WITH CONCRETE EDGES 1/4" BEVELED, AND WITH THE JOINT SURFACE NOT MORE THAN 1/4" BELOW THE ADJOINING CONCRETE SURFACE.

11. CURB RAMPS MUST BE WHOLLY CONTAINED WITHIN THE CROSSWALK CROSSING.

12. THE CLEAR SPACE SHALL BE INCREASED TO 5 FEET WHERE THE TURNING SPACE IS CONSTRAINED AT THE BACK OF THE SIDEWALK.

13. ON CURVED CROSSWALKS, THE MAXIMUM SEPARATION BETWEEN THE CURB AND DETECTABLE WARNING SURFACE SHALL NOT EXCEED 5 FEET. THE MAXIMUM SEPARATION AREA MAY BE WITHIN THE 4' BY 4' CLEAR ZONE. A SHOP DRAWING SHALL BE SUBMITTED PRIOR TO CONSTRUCTION FOR APPROVAL.

CURB RAMP NOTES

GENERAL PLANTING NOTES

1. THIS PLAN SHALL BE USED FOR LANDSCAPE PLANTING PURPOSES ONLY. EXAMINE ALL ENGINEERING DRAWINGS AND FIELD CONDITIONS FOR SPECIFIC LOCATIONS OF UTILITIES AND STRUCTURES AND NOTIFY THE LANDSCAPE ARCHITECT OF ANY DISCREPANCIES OR LOCATION CONFLICTS PRIOR TO PLANTING INSTALLATION.
2. THE CONTRACTOR IS RESPONSIBLE TO LOCATE AND VERIFY LOCATION OF ALL UTILITIES ON SITE PRIOR TO CONSTRUCTION.
3. ALL PLANT MATERIAL SHALL CONFORM TO GUIDELINES AS SET FORTH IN THE LATEST EDITION OF THE AMERICAN ASSOCIATION OF NURSERYMEN'S STANDARD FOR NURSERY STOCK OR THE PLANT MATERIAL WILL BE UNACCEPTABLE. ALL PLANT MATERIAL SHALL BE TRUE TO SPECIES, VARIETY, SIZE AND BE CERTIFIED DISEASE AND INSECT FREE. THE OWNER AND/OR THE LANDSCAPE ARCHITECT RESERVES THE RIGHT TO APPROVE ALL PLANT MATERIAL ON SITE PRIOR TO INSTALLATION.
4. NO PLANT SUBSTITUTIONS SHALL BE PERMITTED WITH REGARD TO SIZE, SPECIES, OR VARIETY WITHOUT WRITTEN PERMISSION OF THE LANDSCAPE CONSULTANT FOR THE TOWN OF NEWBURGH. WRITTEN PROOF OF PLANT MATERIAL UNAVAILABILITY MUST BE DOCUMENTED.
5. THE LOCATION OF ALL PLANT MATERIAL INDICATED ON THE LANDSCAPE PLANS ARE APPROXIMATE. THE FINAL LOCATION OF ALL PLANT MATERIAL AND PLANTING BED LINES SHALL BE DETERMINED IN THE FIELD UNDER THE DIRECTION OF THE LANDSCAPE ARCHITECT. NO SHADE TREE, STREET TREE, ORNAMENTAL FLOWERING TREE OR EVERGREEN TREE SHALL BE PLANTED CLOSER THAN 10' FROM ANY SIDEWALK, DRIVEWAY, CURB OR UTILITY LOCATION UNLESS SPECIFICALLY DIMENSIONED ON THE LANDSCAPE PLAN OR INSTALLED WITH PHYSICAL ROOT BARRIER.
6. ALL STREET TREES AND SHADE TREES PLANTED NEAR PEDESTRIAN OR VEHICULAR ACCESS SHOULD NOT BE BRANCHED LOWER THAN 8'-0" ABOVE GRADE. ALL PLANT MATERIAL LOCATED WITHIN SIGHT TRIANGLE EASEMENTS SHALL NOT EXCEED A MATURE HEIGHT OF 30" ABOVE THE ELEVATION OF THE ADJACENT CURB. ALL STREET TREES PLANTED IN SIGHT TRIANGLE EASEMENTS SHALL BE PRUNED TO NOT HAVE BRANCHES BELOW 10'-0".
7. THE PLANTING PLAN SHALL TAKE PRECEDENCE OVER THE PLANT SCHEDULE SHOULD ANY PLANT QUANTITY DISCREPANCIES OCCUR.
8. ALL PLANT MATERIAL SHALL BE PROPERLY INSTALLED IN CONFORMANCE WITH THE TYPICAL PLANTING DETAILS. INSTALL ALL PLANT MATERIAL ON UNDISTURBED GRADE. PROVIDE BURLAP WRAPPING WITH A 50% OVERLAP. CUT AND REMOVE JUTE BURLAP FROM TOP ONE-THIRD OF THE ROOT BALL. WIRE BASKETS AND AND NOT JUTE BURLAP SHALL BE COMPLETELY REMOVED PRIOR TO BACKFILLING THE PLANT PIT.
9. BRANCHES OF DECIDUOUS TREES SHALL BE PRUNED BACK BY NO MORE THAN ONE QUARTER (1/4) TO BALANCE THE TOP GROWTH WITH ROOTS AND TO PRESERVE THEIR CHARACTER AND SHAPE. THE CENTRAL LEADER OF TREE SHALL NOT BE PRUNED.
10. PROVIDE PLANTING PITS AS INDICATED ON PLANTING DETAILS. BACKFILL PLANTING PITS WITH ONE PART EACH OF TOPSOIL, PEAT MOSS AND PARENT MATERIAL. IF WET SOIL CONDITIONS EXIST THEN PLANTING PITS SHALL BE EXCAVATED AN ADDITIONAL 12" AND FILLED WITH CRUSHED STONE.
11. ALL PLANT MATERIAL SHALL BEAR THE SAME RELATION TO FINISHED GRADE AS IT BORE TO EXISTING GRADE AT NURSERY.
12. OPTIMUM PLANTING TIME:
DECIDUOUS - APRIL 1 TO JUNE 1 & OCTOBER 15 TO DECEMBER 15.
CONIFEROUS - APRIL 1 TO JUNE 1 & SEPTEMBER 1 TO NOVEMBER 1.
13. NEWLY INSTALLED PLANT MATERIAL SHALL BE WATERED AT THE TIME OF INSTALLATION. REGULAR WATERING SHALL BE PROVIDED TO ENSURE THE ESTABLISHMENT, GROWTH AND SURVIVAL OF ALL PLANTS.
14. ALL PLANT MATERIAL SHALL BE WARRANTED FOR A PERIOD OF TWO YEARS. REPLACE, IN ACCORDANCE WITH THE DRAWINGS AND SPECIFICATIONS, ALL PLANTS THAT ARE MISSING, MORE THAN 25% DEAD, WHICH DO NOT DEVELOP FROM PLANTING STOCK, THAT APPEAR UNHEALTHY OR UNSIGHTLY AND/OR HAVE LOST THEIR NATURAL SHAPE DUE TO DEAD BRANCHES, OR ANY TREE THAT LOSES THE MAIN LEADER SHALL BE REPLACED. PLANT MATERIAL SHALL BE INSPECTED BY THE LANDSCAPE CONSULTANT FOR THE TOWN OF NEWBURGH UPON COMPLETION OF WORK AND DURING EVERY GROWING SEASON FOR TWO YEARS. PLANTS THAT NEED REPLACEMENT SHALL BE NOTED ON AN INSPECTION REPORT AND MUST BE REPLACED WITHIN TWO MONTHS OF RECEIPT OF THE INSPECTION REPORT OR WITHIN TWO MONTHS FROM THE NEXT FOLLOWING GROWING SEASON.
15. THE LANDSCAPE CONTRACTOR SHALL PROVIDE A MINIMUM 6" LAYER OF TOPSOIL IN ALL LAWN AREAS AND A MINIMUM OF 18" OF TOPSOIL IN ALL PLANTING AREAS. A FULL SOIL ANALYSIS SHALL BE CONDUCTED AFTER CONSTRUCTION AND PRIOR TO PLANTING TO DETERMINE THE EXTENT OF SOIL AMENDMENT REQUIRED. SOIL PH SHOULD BE 5.5-6.5.
16. ALL DISTURBED LAWN AREAS SHALL BE STABILIZED WITH EITHER SOD OR SEED AS INDICATED ON THE LANDSCAPE PLANS. SOD SHALL CONSIST OF A NEW YORK CERTIFIED MIXTURE. SEED SHALL BE IN ACCORDANCE WITH THE LOCAL SOIL EROSION AND SEDIMENT CONTROL DISTRICT'S SEED SPECIFICATIONS AS NOTED ON THE SOIL EROSION AND SEDIMENT CONTROL PLAN. ALL DISTURBED LAWN AREAS SHALL BE TOPSOILED, LIMED, FERTILIZED AND FINE GRADED PRIOR TO LAWN INSTALLATION.
17. ALL PLANTING BEDS SHALL RECEIVE 3" OF SHREDDED HARDWOOD BARK MULCH.
18. ALL SHRUB MASSES SHALL BE PLANTED IN CONTINUOUS MULCHED BEDS.
19. ALL EXISTING TREES AND SHRUBS TO BE PRESERVED ON SITE SHALL BE PROTECTED AGAINST CONSTRUCTION DAMAGE BY SNOW FENCING. ALL FENCING SHALL BE PLACED OUTSIDE THE INDIVIDUAL TREE CANOPY. ALL TREES TO REMAIN SHALL BE IDENTIFIED IN THE FIELD PRIOR TO COMMENCEMENT OF CONSTRUCTION. TREE PROTECTION FENCING SHALL BE INSTALLED PRIOR TO COMMENCEMENT OF CONSTRUCTION, GRADING OR CLEARING. ALL EXISTING VEGETATION BEING PRESERVED AND LOCATED AT THE EDGE OF THE NEW TREELINE, SHALL BE PRUNED AND TRIMMED TO REMOVE ALL DEAD, DISEASED, OR DAMAGED BRANCHES.
20. ALL PLANTING DEBRIS (WIRE, TWINE, RUBBER HOSE, BACKFILL ETC.) SHALL BE REMOVED FROM THE SITE AFTER PLANTING IS COMPLETE. PROPERTY IS TO BE LEFT IN A NEAT ORDERLY CONDITION IN ACCORDANCE WITH ACCEPTED PLANTING PRACTICES.

GENERAL SEEDING NOTES

1. TEMPORARY SEEDING SHALL CONSIST OF PERENNIAL RYEGRASS APPLIED AT A RATE OF 1.0 LBS. PER 1000 SF OR SPRING OATS APPLIED AT A RATE OF 2.0 LBS. PER 1000 SF. TEMPORARY SEEDING SHALL BE MULCHED AND MAINTAINED UNTIL DISTURBED AREAS ARE PERMANENTLY STABILIZED WITH PERMANENT SEEDING.
2. PERMANENT SEEDING SHALL CONSIST OF THE FOLLOWING MIXTURE OR APPROVED EQUAL - OPTIMUM SEEDING DATES ARE BETWEEN APRIL 1 AND MAY 31 AND AUGUST 16 AND OCTOBER 15.

MIXTURE -	HARD FESCUE	120 LBS/ACRE
	PERENNIAL RYE GRASS	30 LBS/ACRE
	KENTUCKY BLUE GRASS (BLEND)	40 LBS/ACRE
MIXTURE -	TALL FESCUE	160 LBS/ACRE
	PERENNIAL RYE GRASS (BLEND)	20 LBS/ACRE
	KENTUCKY BLUE GRASS (BLEND)	20 LBS/ACRE

3. PERMANENT SEEDING TO BE APPLIED BY RAKING OR DRILLING INTO THE SOILS AT A RATE OF 150# PER ACRE. SLOPED AREA TO BE COVERED WITH MULCH AS INDICATED IN NOTE 5.
4. FERTILIZER FOR THE ESTABLISHMENT OF TEMPORARY AND PERMANENT VEGETATIVE COVER SHALL BE 10-20-20 APPLIED AT A RATE OF 14# PER 1000 SF OR AS DETERMINED BY SOIL TESTS. LIMESTONE FOR TEMPORARY SEEDING SHALL BE APPLIED AT A RATE OF 90# PER 1000 SF. LIMESTONE FOR PERMANENT SEEDING SHALL BE APPLIED AT RATE OF 135# PER 1000 SF.
5. IF SEASON PREVENTS THE ESTABLISHMENT OF TEMPORARY OR PERMANENT SEEDING, EXPOSED AREA TO BE STABILIZED WITH MULCH AS INDICATED IN NOTE 6.
6. MULCH TO CONSIST OF SMALL GRAIN STRAW OR SALT HAY ANCHORED WITH A WOOD AND FIBER MULCH BINDER OR AN APPROVED EQUAL. MULCH WILL BE SPREAD AT RATES OF 90 TO 115 LBS. PER 1000 SF AND ANCHORED WITH A MULCH ANCHORING TOOL OR LIQUID MULCH BINDER, AND SHALL BE PROVIDED ON ALL SEEDINGS. HYDROMULCH SHALL ONLY BE USED DURING OPTIMUM GROWING SEASONS.
7. WORK LIME AND FERTILIZER INTO SOIL AS NEARLY AS PRACTICAL TO A DEPTH OF 4 INCHES WITH A DISC, SPRINGTOOTH HARROW, OR OTHER SUITABLE EQUIPMENT. THE FINAL HARROWING OR DISCING OPERATION SHOULD BE ON ON THE GENERAL CONTOUR. CONTINUE TILLAGE UNTIL A REASONABLY UNIFORM, FINE SEEDBED IS PREPARED. ALL BUT CLAY OR SILTY SOILS AND COARSE SANDS SHOULD BE ROLLED TO FIRM THE SEEDBED WHEREVER FEASIBLE.
8. REMOVE FROM THE SURFACE ALL STONES TWO INCHES OR LARGER IN ANY DIMENSION. REMOVE ALL OTHER DEBRIS, SUCH AS WIRE, CABLE, TREE ROOTS, PIECES OF CONCRETE, CLODS, LUMPS, OR OTHER UNSUITABLE MATERIAL.
9. INSPECT SEEDBED JUST BEFORE SEEDING. IF TRAFFIC HAS LEFT THE SOIL COMPACTED, THE AREA MUST BE RETILLED AND FIRMED AS ABOVE.

Rev.	DATE	DRAWN BY	DESCRIPTION

UNAUTHORIZED ALTERATION TO A MAP BEARING A LICENSED PROFESSIONAL ENGINEER'S SEAL IS A VIOLATION OF SECTION 7209, SUB-DIVISION 2, OF THE NEW YORK STATE EDUCATION LAW. THE CERTIFICATION IS NOT AN EXPRESS OR IMPLIED WARRANTY OR GUARANTEE, IT IS PURELY A STATEMENT OF PROFESSIONAL OPINION BASED ON KNOWLEDGE, INFORMATION AND BELIEF, BASED ON EXISTING FIELD EVIDENCE AND DOCUMENTARY EVIDENCE AVAILABLE. CERTIFICATIONS ARE NOT TRANSFERABLE TO ADDITIONAL INSTITUTIONS OR SUBSEQUENT OWNERS.

ANDREW B. FETHERSTON
NEW YORK LICENSED PROFESSIONAL ENGINEER

MASER CONSULTING P.A.
Consulting, Municipal & Environmental Engineers
Planners ■ Surveyors ■ Landscape Architects
State of N.Y. Certificate of Authorization: 000072

New Jersey New York Pennsylvania Virginia
Customer Loyalty through Client Satisfaction

COPYRIGHT ©2014, MASER CONSULTING P.A.
ALL RIGHTS RESERVED
THIS DRAWING AND ALL THE INFORMATION CONTAINED HEREIN IS AUTHORIZED FOR USE ONLY BY THE PARTY FOR WHOM THE WORK WAS CONTRACTED OR TO WHOM IT IS CERTIFIED. THIS DRAWING MAY NOT BE COPIED, REUSED, DISCLOSED, DISTRIBUTED OR RELIED UPON FOR ANY OTHER PURPOSE WITHOUT THE EXPRESS WRITTEN CONSENT OF MASER CONSULTING, P.A.

NEWBURGH OFFICE
1607 Route 300
Suite 101
Newburgh, NY 12550
Phone: 845.564.4495
Fax: 845.564.0278
email: solutions @ maserconsulting.com

HUDSON VALLEY PERSONNEL SUPPORT CENTER OF JEHOVAH'S WITNESSES

CONSTRUCTION DETAILS

FOR

WATCHTOWER BIBLE & TRACT SOCIETY OF NEW YORK, INC.
TAX LOTS 97-2-30.1, 30.22 & 33
TOWN OF NEWBURGH ORANGE COUNTY N.Y.

SCALE:	DATE:	DRAWN BY:	CHECKED BY:
AS NOTED	11/21/14	CSS	ABF

PROJECT NUMBER: 13000398C

SHEET NUMBER: 7 of 9

WATER SYSTEM NOTES

1. "CONSTRUCTION OF POTABLE WATER UTILITIES AND CONNECTION TO THE TOWN OF NEWBURGH WATER SYSTEM REQUIRES A PERMIT FROM THE TOWN OF NEWBURGH WATER DEPARTMENT. ALL REQUIREMENTS SHALL CONFORM TO THE REQUIREMENTS OF THE OCDOH AND THE TOWN OF NEWBURGH."
2. ALL WATER SERVICE LINES FOUR (4) INCHES AND LARGER IN DIAMETER SHALL BE CEMENT CLASS 52 DUCTILE IRON PIPE CONFORMING TO ANSI/AWWA C151/A21.51-91 OR LATEST REVISION FOR DUCTILE IRON PIPE. JOINTS SHALL BE EITHER PUSH-ON OR MECHANICAL JOINT AS REQUIRED.
3. THRUST RESTRAINT OF THE PIPE SHALL BE THROUGH THE USE OF JOINT RESTRAINT. THRUST BLOCKS ARE NOT ACCEPTABLE. JOINT RESTRAINT SHALL BE THROUGH THE USE OF MECHANICAL JOINT PIPE WITH RETAINER GLANDS. ALL FITTINGS AND VALVES SHALL ALSO BE INSTALLED WITH RETAINER GLANDS FOR JOINT RESTRAINT. RETAINER GLANDS SHALL BE EBBA IRON MEGALUG SERIES 1100 OR APPROVED EQUAL. THE USE OF A MANUFACTURED RESTRAINED JOINT PIPE IS ACCEPTABLE WITH PRIOR APPROVAL OF THE WATER DEPARTMENT.
4. ALL FITTINGS SHALL BE CAST IRON OR DUCTILE IRON, MECHANICAL JOINT, CLASS 250 AND CONFORM TO ANSI/AWWA C110 \ A21.10-87 OR LATEST REVISION FOR DUCTILE AND GRAY IRON FITTINGS OR ANSI/AWWA C153.53 LATEST REVISION FOR DUCTILE IRON COMPACT FITTINGS.
5. ALL VALVES SHALL BE RESILIENT WEDGE, MECHANICAL JOINT GATE VALVES CONFORMING TO ANSI/AWWA C500 LATEST REVISION SUCH AS MUELLER A-2360-23 OR APPROVED EQUAL.
6. ALL VALVE BOXES SHALL BE MUELLER EXTENSION TYPE WITH ARCH PATTERN BASE OR APPROVED EQUAL, SET ON WOODEN BLOCKS POSITIONED PERPENDICULAR TO THE PIPE AND ON COMPACTED BACKFILL.
7. TAPPING SLEEVE SHALL BE MECHANICAL JOINT SUCH AS MUELLER H-615 OR EQUAL. TAPPING VALVE SHALL BE RESILIENT WEDGE, MECHANICAL JOINT BY FLANGED END SUCH AS MUELLER T-2360-19 OR EQUAL. ALL TAPPING SLEEVES AND VALVES SHALL BE TESTED TO 150 PSI MINIMUM; TESTING OF THE TAPPING SLEEVE AND VALVE MUST BE WITNESSED AND ACCEPTED BY THE TOWN OF NEWBURGH WATER DEPARTMENT PRIOR TO CUTTING INTO THE PIPE.
8. WHERE WATER MAIN CROSSES BELOW A CULVERT OR OTHER CONDUIT, CONCRETE SUPPORT BLOCKS SHALL BE PLACED ON BOTH SIDES OF WATER MAIN TO ELIMINATE ANY IMPOSED LOADING ON WATER MAIN FROM THE CULVERT OR OTHER CONDUIT.
9. ALL PIPE INSTALLATION SHALL BE SUBJECT TO INSPECTION BY THE TOWN OF NEWBURGH WATER DEPARTMENT. THE CONTRACTOR SHALL BE RESPONSIBLE FOR COORDINATING ALL INSPECTIONS AS REQUIRED WITH THE TOWN OF NEWBURGH WATER DEPARTMENT.
10. ALL FIRE HYDRANTS SHALL BE IN ACCORDANCE WITH LATEST REVISION OF AWWA SPECIFICATION C502 AND SHALL BE IN COMPLIANCE WITH THE TOWN OF NEWBURGH SPECIFICATIONS (CLOW-EDDY MODEL F-2640).
11. THE WATER MAIN SHALL BE TESTED, DISINFECTED AND FLUSHED IN ACCORDANCE WITH AWWA STANDARDS AS WELL AS THE TOWN OF NEWBURGH REQUIREMENTS. ALL TESTING, DISINFECTION AND FLUSHING SHALL BE COORDINATED WITH THE TOWN OF NEWBURGH WATER DEPARTMENT. PRIOR TO PUTTING THE WATER MAIN IN SERVICE SATISFACTORY SANITARY RESULTS FROM A CERTIFIED LAB MUST BE SUBMITTED TO THE TOWN OF NEWBURGH WATER DEPARTMENT. THE TEST SAMPLES MUST BE COLLECTED BY A REPRESENTATIVE OF THE TESTING LABORATORY AND WITNESSED BY THE TOWN OF NEWBURGH WATER DEPARTMENT.

SEWER SYSTEM NOTES

1. CONSTRUCTION OF SANITARY SEWER FACILITIES AND CONNECTION TO THE TOWN OF NEWBURGH SANITARY SEWER SYSTEM REQUIRES A PERMIT FROM THE TOWN OF NEWBURGH SEWER DEPARTMENT. ALL CONSTRUCTION SHALL CONFORM TO THE REQUIREMENTS OF THE NYSDEC AND THE TOWN OF NEWBURGH.
2. ALL GRAVITY SANITARY SEWER SERVICE LINES SHALL BE 4 INCHES IN DIAMETER OR LARGER AND SHALL BE SDR-35 PVC PIPE CONFORMING TO ASTM D-3034-89 OR LATEST REVISION. JOINTS SHALL BE PUSH-ON WITH ELASTOMERIC RING GASKET CONFORMING TO ASTM D-3212 OR LATEST REVISION. FITTINGS SHALL BE AS MANUFACTURED BY THE PIPE SUPPLIER OR EQUAL AND SHALL HAVE A BELL AND SPIGOT CONFIGURATION COMPATIBLE WITH THE PIPE.
3. ALL PIPE INSTALLATION SHALL BE SUBJECT TO INSPECTION BY THE TOWN OF NEWBURGH SEWER DEPARTMENT. THE CONTRACTOR SHALL BE RESPONSIBLE FOR COORDINATING ALL INSPECTIONS AS REQUIRED WITH THE TOWN OF NEWBURGH SEWER DEPARTMENT.
4. THE SEWER MAIN SHALL BE TESTED IN ACCORDANCE WITH TOWN OF NEWBURGH REQUIREMENTS. ALL TESTING SHALL BE WITNESSED BY AND COORDINATED WITH THE TOWN OF NEWBURGH SEWER DEPARTMENT.

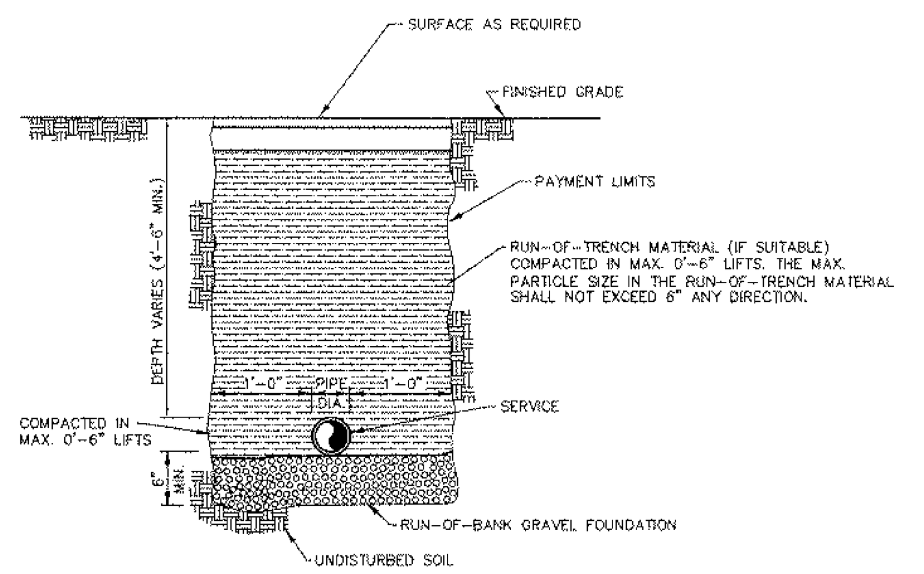

WATER SERVICE TRENCH DETAIL
N.T.S.

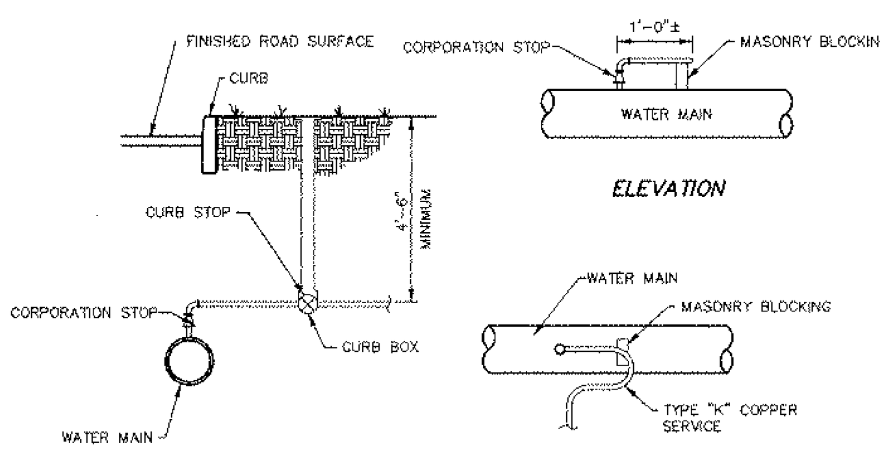

TYPICAL POTABLE WATER SERVICE DETAIL
SCALE: NONE

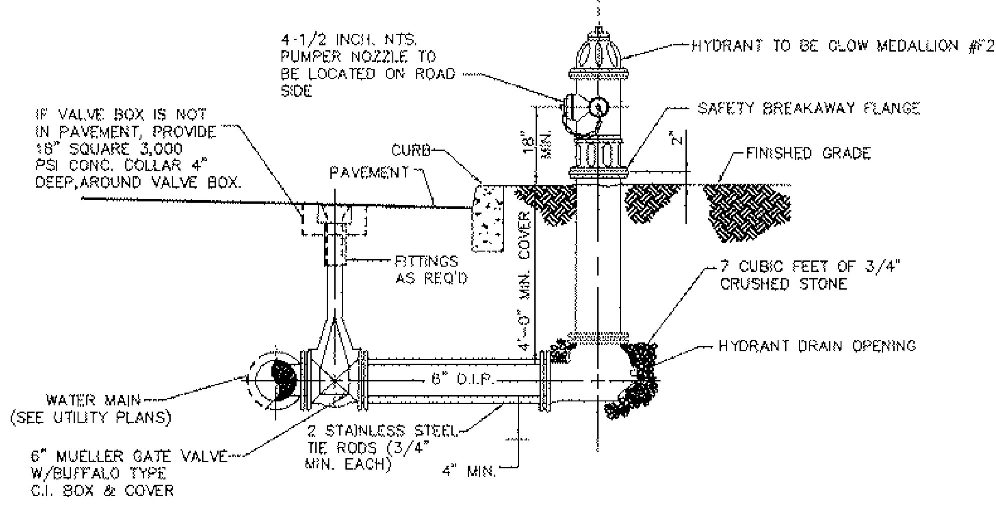

FIRE HYDRANT DETAIL
N.T.S.

PIPE SIZE IN INCHES	NUMBER AND SIZE OF RODS REQUIRED AND PIPE LENGTH IN FEET* TO BE RESTRAINED: 90° TEE OR DEAD END PLUG No.	SIZE		45° No.	SIZE		22 1/2° No.	SIZE	
4	2	3/4"	30'	2	3/4"	10'	2	3/4"	5'
6	2	3/4"	40'	2	3/4"	10'	2	3/4"	5'
8	4 OR 2	3/4" OR 7/8"	50'	2	3/4"	15'	2	3/4"	5'
10	4 OR 2	3/4" OR 1"	60'	2	3/4"	20'	2	3/4"	5'
12	4	7/8"	70'	2	3/4"	20'	2	3/4"	5'
14	4	1"	80'	2	3/4"	25'	2	3/4"	5'
16	4	1"	80'	2	3/4"	25'	2	3/4"	5'

* LENGTH OF PIPE TO BE RESTRAINED IS FOR EACH SIDE OF BEND

NOTES:
1. USE OF MECHANICAL JOINT RETAINER GLANDS SHALL PROVIDE A THRUST RESTRAINT SYSTEM EQUIVALENT TO THAT LISTED IN THE TABLE FOR CLAMPS AND RODS.
2. LENGTHS ARE BASED ON THE FOLLOWING CRITERIA : 150 P.S.I. MAXIMUM PRESSURE AND 3'-6" OF COVER. TABLE IS FOR USE WITH C.I./D.I.P. ONLY. IF TEST CONDITIONS ARE MORE SEVERE OR LARGER PIPES ARE PROPOSED, THEN SPECIAL COMPUTATIONS MUST BE PROVIDED BY LICENSED P.E.

JOINT RESTRAINT SCHEDULE

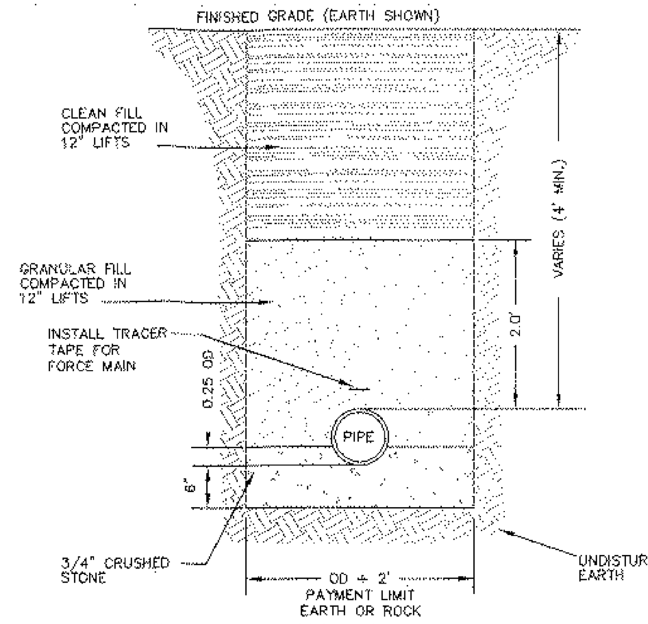

SANITARY SEWER TRENCH AND PIPE BEDDING DETAIL (FORCE MAIN OR GRAVITY)
N.T.S.

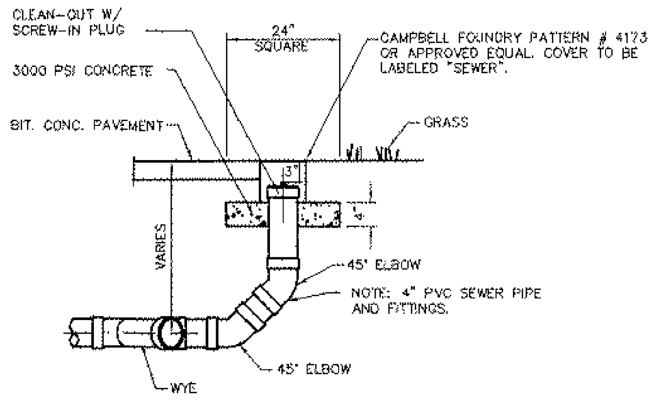

SANITARY SEWER CLEANOUT
N.T.S.

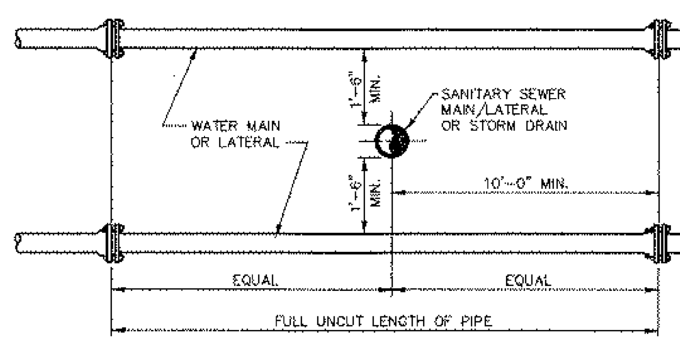

VERTICAL SEPARATION

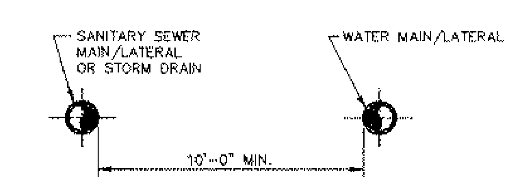

HORIZONTAL SEPARATION

NOTE : NO DEVIATION IN THE SEPARATION REQUIREMENTS WILL BE PERMITTED WITHOUT THE EXPRESS APPROVAL OF THE ORANGE COUNTY DEPARTMENT OF HEALTH.

SANITARY/STORM SEWER-WATER MAIN SEPARATION DETAIL
N.T.S.

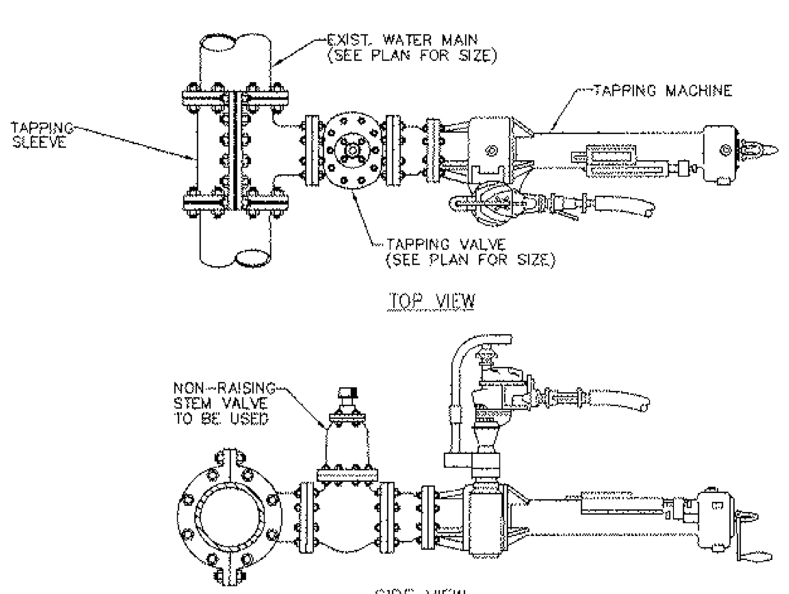

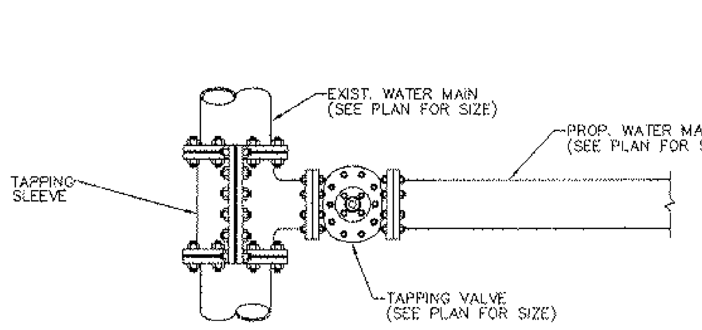

NOTES:
1. WET TAP VALVE CAN BE INSTALLED IN EITHER VERTICAL OR HORIZONTAL POSITION.
2. CONTRACTOR SHALL VERIFY DEPTH OF BURY, MATERIAL, DIAMETER (O.D.) AND OPERATING PRESSURE OF EXISTING WATER MAIN PRIOR TO ORDERING OF WET TAP UNIT.

WET TAP DETAIL
N.T.S.

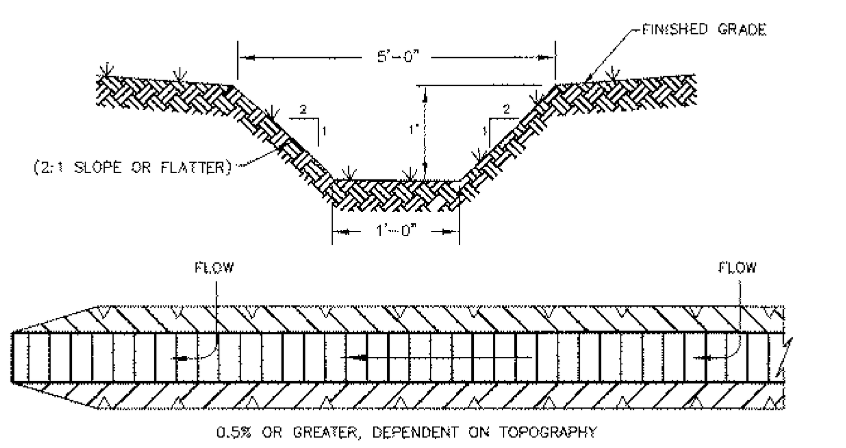

TO BE INSTALLED ABOVE DISTURBED AREAS, TO DIVERT RUNOFF OFF-SITE WITHOUT INCREASING EROSION; INTERMITTENTLY ACROSS DISTURBED AREAS, TO SHORTEN OVERLAND FLOW DISTANCES; BELOW DISTURBED AREAS, TO DIVERT SEDIMENT-LADEN WATER TO A SEDIMENT TRAPPING DEVICE; AND TO SAFELY TRANSPORT RUNOFF ALONG ROADWAYS.

SWALE INSTALLATION NOTES

1. ALL TEMPORARY SWALES SHALL HAVE UNINTERRUPTED POSITIVE GRADE TO AN OUTLET.
2. DIVERTED RUNOFF FROM A DISTURBED AREA SHALL BE CONVEYED TO A SEDIMENT TRAPPING DEVICE.
3. DIVERTED RUNOFF FROM AN UNDISTURBED AREA SHALL OUTLET DIRECTLY INTO AN UNDISTURBED STABILIZED AREA AT NON-EROSIVE VELOCITY.
4. ALL TREES, BRUSH, STUMPS, OBSTRUCTIONS AND OTHER OBJECTIONABLE MATERIAL SHALL BE REMOVED AND DISPOSED OF SO AS NOT TO INTERFERE WITH THE PROPER FUNCTIONING OF THE SWALE.
5. THE SWALE SHALL BE EXCAVATED OR SHAPED TO LINE, GRADE AND CROSS SECTION AS REQUIRED TO MEET THE CRITERIA SPECIFIED HEREIN AND BE FREE OF BANK PROJECTIONS OR OTHER IRREGULARITIES WHICH WILL IMPEDE NORMAL FLOW.
6. FILLS SHALL BE COMPACTED BY EARTH MOVING EQUIPMENT.
7. ALL EARTH REMOVED AND NOT NEEDED FOR CONSTRUCTION SHALL BE PLACED SO THAT IT WILL NOT INTERFERE WITH THE FUNCTIONING OF THE SWALE.
8. STABILIZATION SHALL BE AS PER THE FLOW CHANNEL STABILIZATION CHART BELOW:

TYPE OF TREATMENT	CHANNEL GRADE	(5 ACRE OR LESS)
1	0.5-3.0%	SEED & STRAW MULCH
2	3.1-5.0%	SEED & STRAW MULCH
3	5.1-8.0%	SEED & COVER W/RECP
4	8.1-20%	LINED W/4-8" RIP RAP

9. PERIODIC INSPECTION AND REQUIRED MAINTENANCE MUST BE PROVIDED AFTER EACH RAIN EVENT.
10. WHERE SWALE TRAVERSES CONSTRUCTION VEHICLE PATH, DEPTH TO BE 6".

TEMPORARY SWALE
N.T.S.

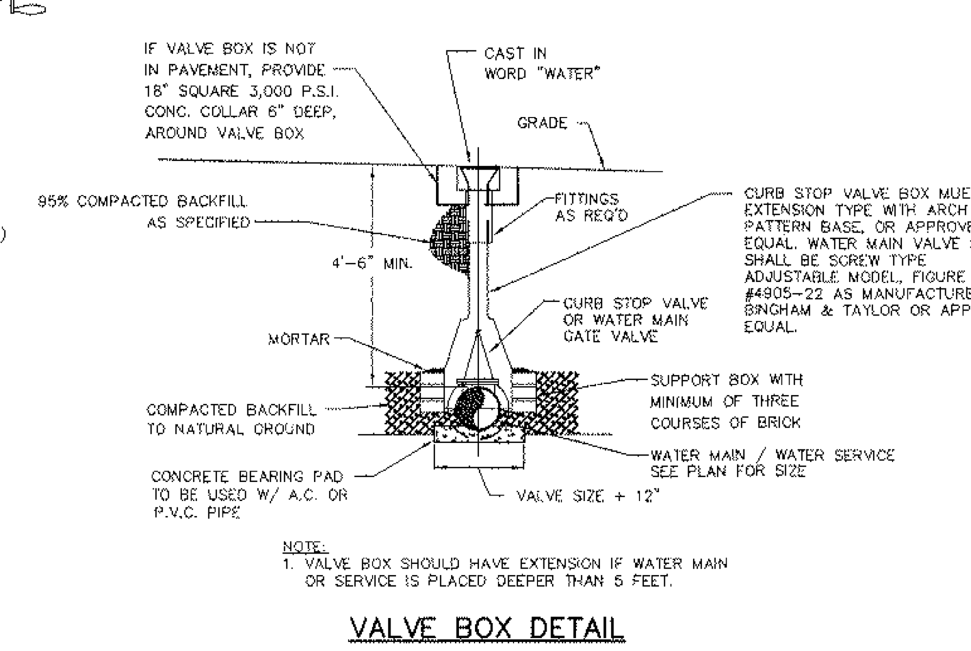

NOTE:
1. VALVE BOX SHOULD HAVE EXTENSION IF WATER MAIN OR SERVICE IS PLACED DEEPER THAN 5 FEET.

VALVE BOX DETAIL
N.T.S.

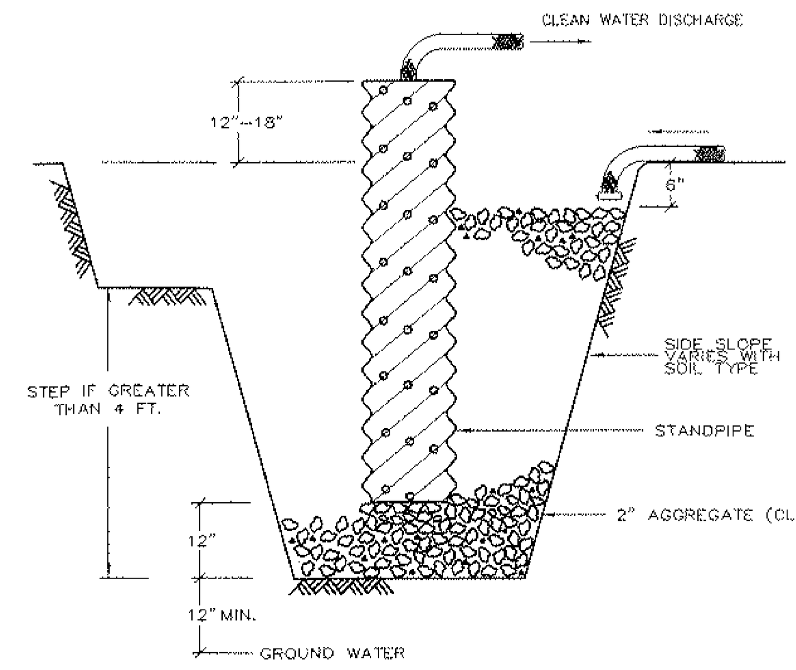

CAN BE USED ON ANY SITE UNDERGOING ACITVE CONSTRUCTION, ESPECIALLY EXCAVATION, BUT GENERALLY ARE NOT SUITABLE FOR LARGE VOLUMES OF RUNOFF. WATER PUMPER FROM EXCAVATIONS OR DIVERTED FROM STOCKPILE OR TRACKING AREAS MAY BE DIRECTED TO DEWATERING PITS FOR PRIMARY SEDIMENT REMOVAL. THIS PRACTICE IS PARTICULARLY APPLICABLE TO SMALL SITES OR URBAN AREAS WHERE THERE IS INSUFFICIENT ROOM FOR MULTIPLE SILT TRAPS OR SEDIMENT BASINS.

INSTALLATION NOTES

1. PIT DIMENSIONS ARE VARIABLE.
2. THE STANDPIPE SHOULD BE A PERFORATED 12" TO 24" DIAMETER CORRUGATED METAL, PVC OR HDPE PIPE.
3. A BASE OF 2" CLEAN AGGREGATE SHOULD BE PLACED IN THE PIT TO A DEPTH OF 12". AFTER INSTALLING THE STANDPIPE, THE PIT SURROUNDING THE STANDPIPE SHOULD THEN BE BACKFILLED WITH 2" AGGREGATE.
4. THE STANDPIPE SHOULD EXTEND 12" - 18" ABOVE THE LIP OF THE PIT.
5. IF DISCHARGE WILL BE PUMPED DIRECTLY TO A STORM DRAINAGE SYSTEM, THE STANDPIPE SHOULD BE WRAPPED WITH FILTER FABRIC BEFORE INSTALLATION. IF DESIRED, 1/4" - 1/2" HARDWARE CLOTH MAY BE PLACED AROUND THE STANDPIPE, PRIOR TO ATTACHING THE FILTER FABRIC. THIS WILL INCREASE THE RATE OF WATER SEEPAGE INTO THE PIPE.

DEWATERING PIT
N.T.S.

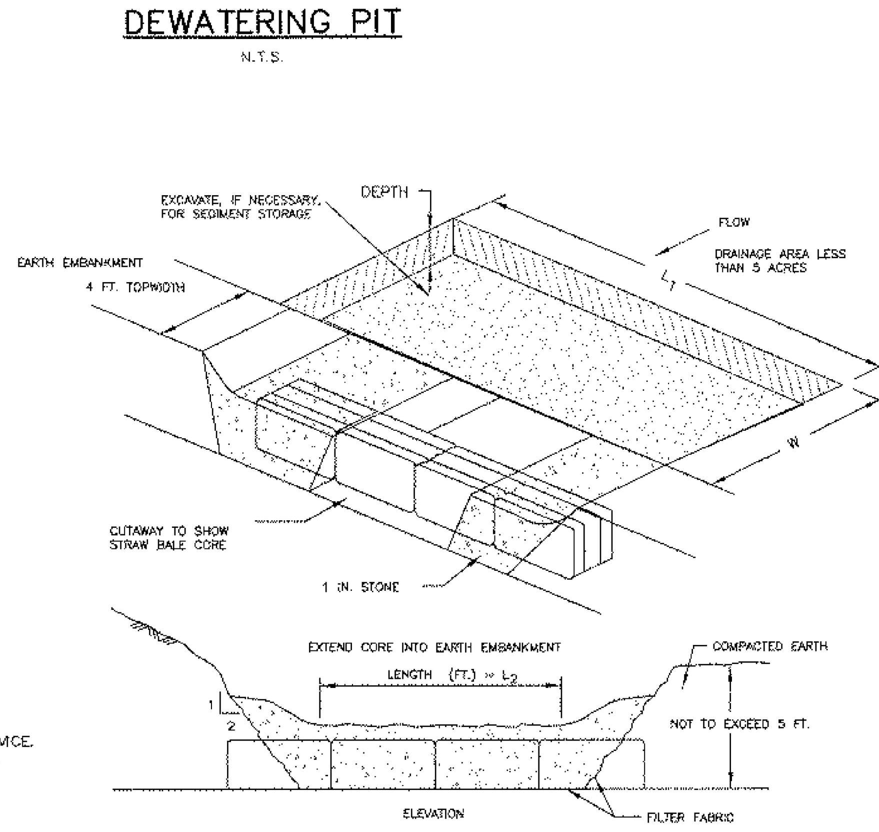

TO BE INSTALLED PRIOR TO GRADING OR FILLING IN THE DRAINAGE AREA THEY ARE TO PROTECT. TRAPS THAT ARE TO FUNCTION DURING BUILDING CONSTRUCTION MUST NOT BE LOCATED WITHIN 20 FEET OF A PROPOSED BUILDING FOUNDATION. WHILE TRAPS SHOULD BE SITED TO MAXIMIZE STORAGE BENEFIT, THEY SHOULD NOT BE LOCATED WETLAND OR WETLAND BUFFER AREAS, OR IN EXISTING WATERCOURSES.

SEE EROSION AND SEDIMENT CONTROL PLAN FOR LOCATIONS.

INSTALLATION NOTES

1. AREA UNDER EMBANKMENT SHALL BE CLEARED, GRUBBED, AND STRIPPED OF ANY VEGETATION AND ROOT MAT. THE POOL AREA SHALL BE CLEARED AS WELL.
2. THE FILL MATERIAL FOR THE EMBANKMENT SHALL BE FREE OF ROOTS OR OTHER WOODY VEGETATION AS WELL AS OVER SIZED STONES, ROCKS, ORGANIC MATERIAL AND OTHER QUESTIONABLE MATERIAL. THE EMBANKMENT SHALL BE COMPACTED BY TRAVERSING WITH EQUIPMENT WHILE IT IS BEING CONSTRUCTED.
3. SEDIMENT SHALL BE REMOVED AND TRAP RESTORED TO ITS ORIGINAL DIMENSIONS WHEN THE SEDIMENT HAS ACCUMULATED TO 1/2 THE DESIGN DEPTH OF THE TRAP. REMOVED SEDIMENT SHALL BE DEPOSITED IN A SUITABLE AREA AND IN SUCH A MANNER THAT IT WILL NOT ERODE.
4. THE STRUCTURE SHALL BE INSPECTED AFTER EACH RAIN AND REPAIRS MADE AS NEEDED.
5. CONSTRUCTION OPERATIONS SHALL BE CARRIED OUT IN SUCH A MANNER THAT EROSION AND WATER POLLUTION IS MINIMIZED.
6. THE STRUCTURE SHALL BE REMOVED AND THE AREA STABILIZED WHEN THE DRAINAGE AREA HAS BEEN PROPERLY STABILIZED.
7. ALL CUT AND FILL SLOPES SHALL BE 1 : 2 OR FLATTER.
8. THE STONE USED IN THE OUTLET SHALL BE SMALL RIPRAP 4"-8" ALONG WITH A 1' THICKNESS OF 2" AGGREGATE PLACED ON THE UP GRADE SIDE ON THE SMALL RIPRAP OR EMBEDDED FILTER CLOTH IN THE RIPRAP.

STONE OUTLET SEDIMENT TRAP
N.T.S.

STONE OUTLET SEDIMENT TRAP/BASIN TABLE

SEDIMENT TRAP	DRAINAGE AREA	AREA (L X W)	DEPTH (FT.)	VOLUME REQ'D (C.F.)	VOLUME PROVIDED (C.F.)	WEIR LENGTH (L_2)
'A' *	0.562 AC.	34' X 15'	4.0 FT.	2,025 C.F.	2,040 C.F.	4.0 FT.
'B'	0.950 AC.	40' X 22'	4.0 FT.	3,420 C.F.	3,600 C.F.	4.0 FT.
'C'	0.686 AC.	40' X 16'	4.0 FT.	2,470 C.F.	2,560 C.F.	4.0 FT.
'D'	0.581 AC.	35' X 15'	4.0 FT.	2,093 C.F.	2,100 C.F.	4.0 FT.

* AREA PROVIDED ABOVE IS FLOOR OF BASIN

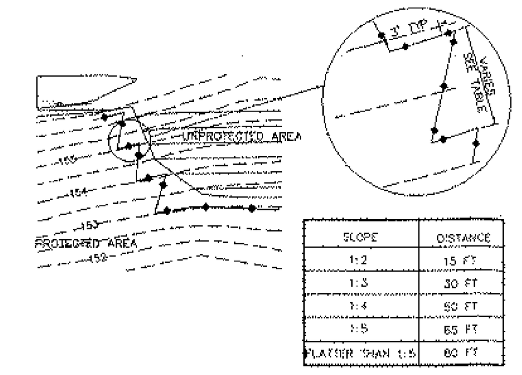

SLOPE	DISTANCE
1:2	15 FT.
1:3	30 FT.
1:4	50 FT.
1:5	65 FT.
FLATTER THAN 1:5	80 FT.

SILT FENCE INSTALLATION
(WHEN NOT PARALLEL TO CONTOURS)
N.T.S.

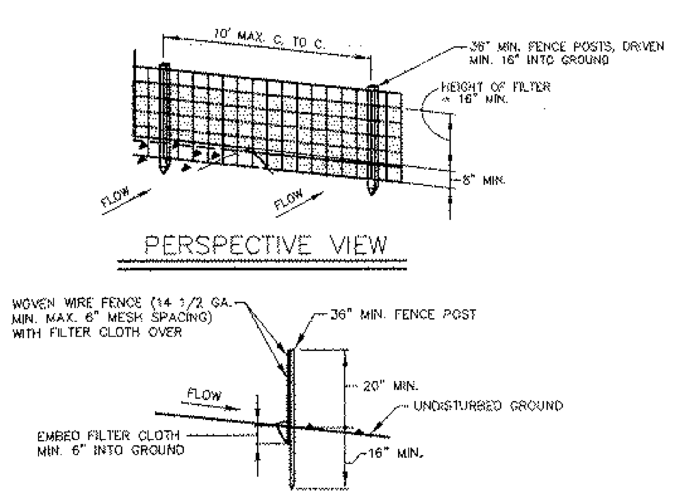

CONSTRUCTION NOTES FOR FABRICATED SILT FENCE

1. WOVEN WIRE FENCE TO BE FASTENED SECURELY TO FENCE POSTS WITH WIRE TIES OR STAPLES.
2. FILTER CLOTH TO BE FASTENED SECURELY TO WOVEN WIRE FENCE WITH TIES SPACED EVERY 24" AT TOP AND MID SECTION.
3. WHEN TWO SECTIONS OF FILTER CLOTH ADJOIN EACH OTHER THEY SHALL BE OVERLAPPED BY SIX INCHES AND FOLDED.
4. MAINTENANCE SHALL BE PERFORMED AS NEEDED AND MATERIAL REMOVED WHEN "BULGES" DEVELOP IN THE SILT FENCE.

POSTS: STEEL EITHER "T" OR "U" TYPE OR 2" HARDWOOD.
FENCE: WOVEN WIRE 14 1/2 GA. 6" MAX. MESH OPENING.
FILTER CLOTH: FILTER X, MIRAFI 100X, STABILINKA T140N, OR APPROVED EQUAL.
PREFABRICATED UNIT: GEOFAB, ENVIROFENCE, OR APPROVED EQUAL.

WIRE REINFORCED SILT FENCE
N.T.S.

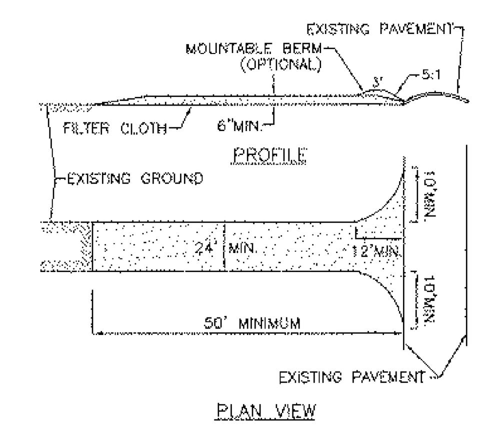

1. STONE SIZE - USE 2" STONE, OR RECLAIMED OR RECYCLED CONCRETE EQUIVALENT.
2. LENGTH - NOT LESS THAN 50 FEET
3. THICKNESS - NOT LESS THAN (6) INCHES.
4. WIDTH - 24'
5. FILTER CLOTH - WILL BE PLACED OVER THE ENTIRE AREA PRIOR TO PLACING OF STONE.
6. SURFACE WATER - ALL SURFACE WATER FLOWING OR DIVERTED TOWARD CONSTRUCTION ENTRANCES SHALL BE PIPED ACROSS THE ENTRANCE. IF PIPING IS IMPRACTICAL, A MOUNTING BERM WITH 5:1 SLOPES WILL BE PERMITTED.
7. MAINTENANCE - THE ENTRANCE SHALL BE MAINTAINED IN A CONDITION WHICH WILL PREVENT TRACKING OR FLOWING OF SEDIMENT ONTO PUBLIC RIGHTS-OF-WAY. ALL SEDIMENT SPILLED, DROPPED, WASHED OR TRACKED ONTO PUBLIC RIGHTS-OF-WAY MUST BE REMOVED IMMEDIATELY.
8. WHEN WASHING IS REQUIRED, IT SHALL BE DONE ON AN AREA STABILIZED WITH STONE AND WHICH DRAINS INTO AN APPROVED SEDIMENT TRAPPING DEVICE.
9. PERIODIC INSPECTION AND NEEDED MAINTENANCE SHALL BE PROVIDED AFTER EACH RAIN.

STABILIZED CONSTRUCTION ENTRANCE
N.T.S.

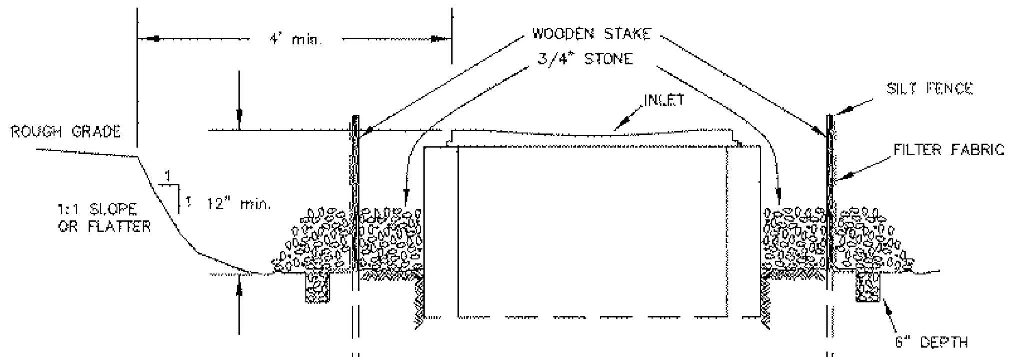

INSTALLATION NOTES

1. EXCAVATE A 6 INCH x 6 INCH TRENCH, OFFSET APPROXIMATELY 2 FEET FROM THE INLET PERIMETER.
2. UNROLL A SECTION AT A TIME AND POSITION THE POSTS AGAINST THE BACK (DOWNSTREAM) WALL OF THE TRENCH (NET SIDE AWAY FROM DIRECTION OF FLOW).
3. DRIVE THE POST INTO THE GROUND UNTIL THE NETTING IS APPROXIMATELY 2 INCHES FROM THE TRENCH BOTTOM.
4. LAY THE TOE-IN FLAP OF FABRIC ONTO THE UNDISTURBED BOTTOM OF THE TRENCH, BACKFILL THE TRENCH AND TAMP THE SOIL. STEEPER SLOPES REQUIRE AN INTERCEPT TRENCH.
5. JOIN SECTIONS AS SHOWN ABOVE. SUPPLEMENT WITH GRAVEL, PILED AGAINST THE FENCE.
6. SEDIMENT SHALL BE REMOVED AND THE TRAP RESTORED TO ITS ORIGINAL DIMENSIONS WHEN THE SEDIMENT HAS ACCUMULATED TO 1/2 THE DESIGN DEPTH OF THE TRAP.
7. THE STRUCTURE SHALL BE INSPECTED AFTER EACH RAIN AND REPAIRS MADE AS NEEDED.

STORM INLET SEDIMENT TRAP
N.T.S.

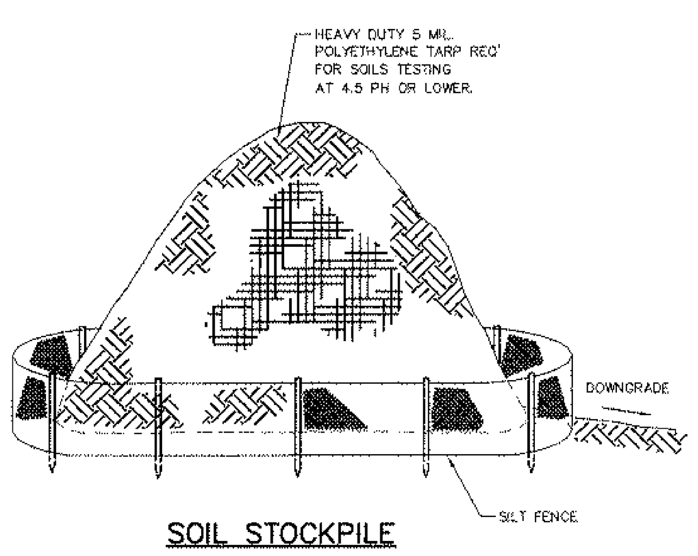

SOIL STOCKPILE
N.T.S.

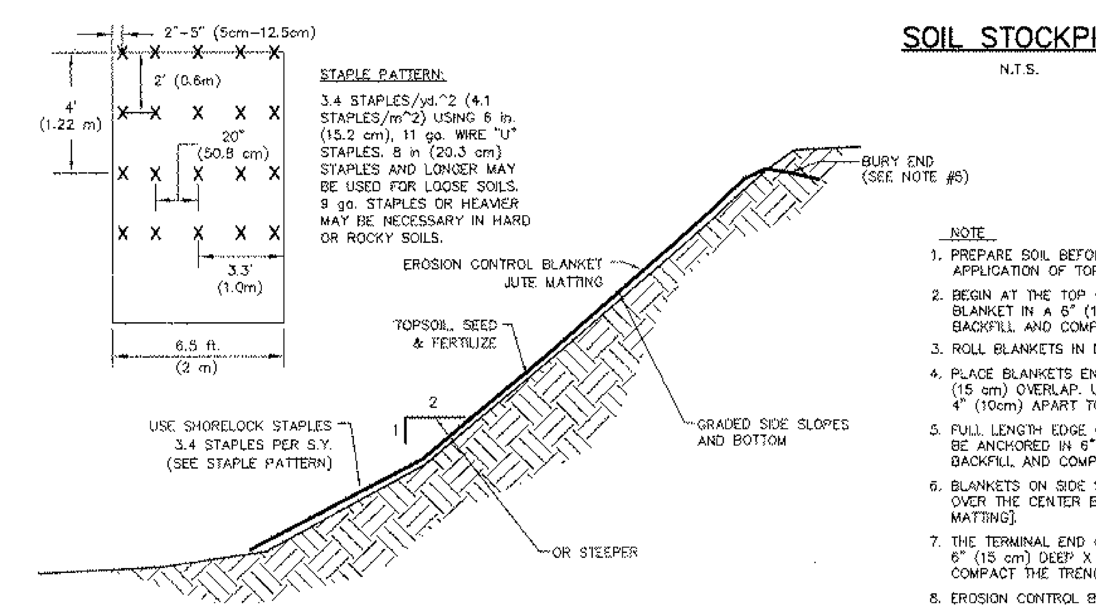

NOTE
1. PREPARE SOIL BEFORE INSTALLING BLANKETS, INCLUDING APPLICATION OF TOPSOIL, FERTILIZER, AND SEED.
2. BEGIN AT THE TOP OF THE SLOPE BY ANCHORING THE BLANKET IN A 6" (15 cm) DEEP x 6" (15 cm) WIDE TRENCH. BACKFILL AND COMPACT THE TRENCH AFTER STAPLING.
3. ROLL BLANKETS IN DIRECTION OF WATER FLOW.
4. PLACE BLANKETS END OVER END (SHINGLE STYLE) WITH A 6" (15 cm) OVERLAP. USE A DOUBLE ROW OF STAGGERED STAPLES 4" (10cm) APART TO SECURE BLANKETS.
5. FULL LENGTH EDGE OF BLANKETS AT TOP OF SIDE SLOPES MUST BE ANCHORED IN 6" (15 cm) DEEP X 6" (15 cm) WIDE TRENCH. BACKFILL AND COMPACT THE TRENCH AFTER STAPLING.
6. BLANKETS ON SIDE SLOPES MUST BE OVERLAPPED 4" (10 cm) OVER THE CENTER BLANKET AND STAPLED [2" (5 cm) FOR C350 MATTING].
7. THE TERMINAL END OF THE BLANKETS MUST BE ANCHORED IN A 6" (15 cm) DEEP X 6" (15 cm) WIDE TRENCH. BACKFILL AND COMPACT THE TRENCH AFTER STAPLING.
8. EROSION CONTROL BLANKET SHALL BE JUTE MATTING.

SLOPE STABILIZATION DETAIL
N.T.S.

Rev.	DATE	DRAWN BY	DESCRIPTION

UNAUTHORIZED ALTERATION TO A MAP BEARING A LICENSED PROFESSIONAL ENGINEER'S SEAL IS A VIOLATION OF SECTION 7209, SUB-DIVISION 2, OF THE NEW YORK STATE EDUCATION LAW. THE CERTIFICATION IS NOT AN EXPRESS OR IMPLIED WARRANTY OR GUARANTEE, IT IS PURELY A STATEMENT OF PROFESSIONAL OPINION BASED ON KNOWLEDGE, INFORMATION AND BELIEF, BASED ON EXISTING FIELD EVIDENCE AND DOCUMENTARY EVIDENCE AVAILABLE. CERTIFICATIONS ARE NOT TRANSFERABLE TO ADDITIONAL INSTITUTIONS OR SUBSEQUENT OWNERS.

ANDREW FETHERSTON
NEW YORK STATE PROFESSIONAL ENGINEER LIC. NO. 073555

MASER CONSULTING P.A.
Consulting, Municipal & Environmental Engineers
Planners • Surveyors • Landscape Architects
State of N.Y. Certificate of Authorization: 0000172

New Jersey New York Pennsylvania Virginia
Customer Loyalty through Client Satisfaction

COPYRIGHT ©2014, MASER CONSULTING P.A
ALL RIGHTS RESERVED

THIS DRAWING AND ALL THE INFORMATION CONTAINED HEREIN IS AUTHORIZED FOR USE ONLY BY THE PARTY FOR WHOM THE WORK WAS CONTRACTED OR TO WHOM IT IS CERTIFIED. THIS DRAWING MAY NOT BE COPIED, REUSED, DISCLOSED, DISTRIBUTED OR RELIED UPON FOR ANY OTHER PURPOSE WITHOUT THE EXPRESS WRITTEN CONSENT OF MASER CONSULTING, P.A.

NEWBURGH OFFICE
1607 Route 300
Suite 101
Newburgh, NY 12550
Phone: 845.564.4495
Fax: 845.564.0278
email: solutions@maserconsulting.com

HUDSON VALLEY PERSONNEL SUPPORT CENTER OF JEHOVAH'S WITNESSES

CONSTRUCTION DETAILS
FOR
WATCHTOWER BIBLE & TRACT SOCIETY OF NEW YORK, INC.
TAX LOTS 97-2-30.1, 30.22 & 33
TOWN OF NEWBURGH ORANGE COUNTY N.Y.

SCALE:	DATE:	DRAWN BY:	CHECKED BY:
AS NOTED	11/21/14	CSS	ABF

PROJECT NUMBER: 13000398C

SHEET NUMBER: 8 of 9

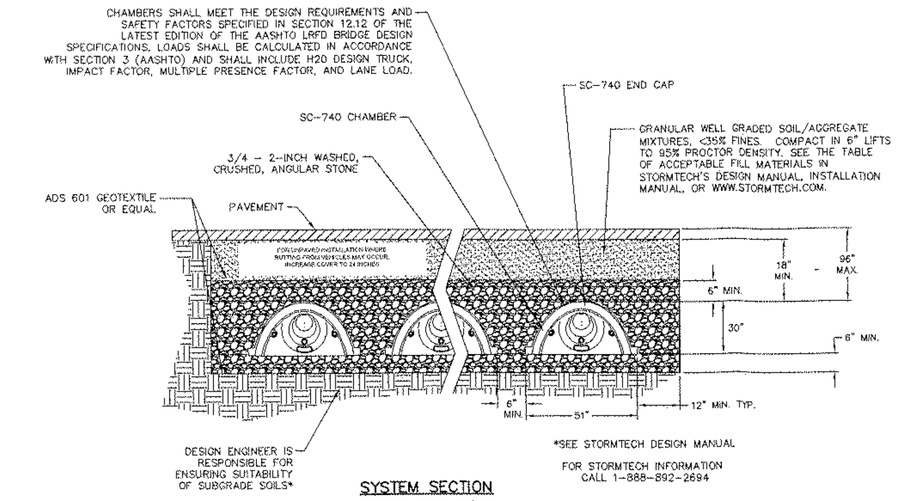

SYSTEM SECTION

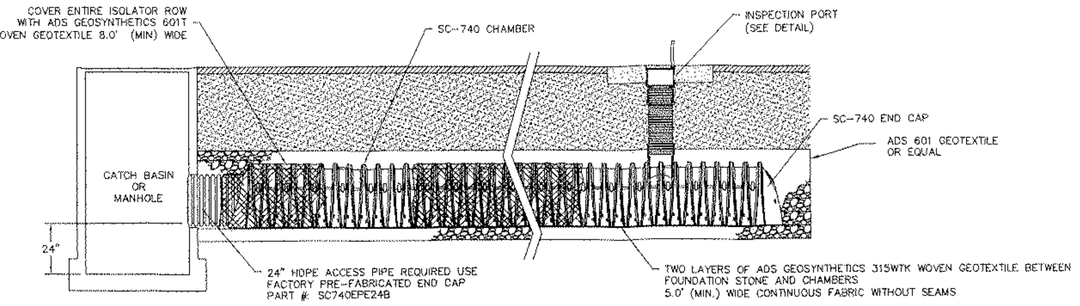

SC-740 ISOLATOR ROW DETAIL

N.T.S.

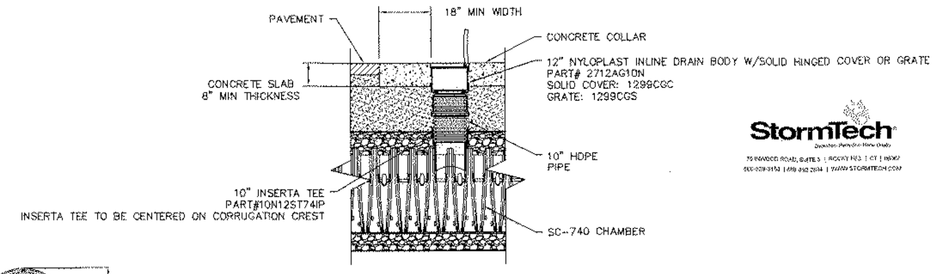

SC-740 INSPECTION PORT DETAIL

N.T.S.

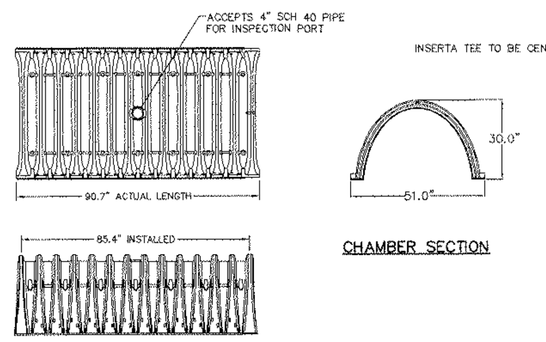

STORMTECH SC-740 CHAMBER (SUBSURFACE SYSTEMS)

N.T.S.

CHAMBER SECTION

STROMTECH NOTES:

1. CHAMBERS SHALL BE STORMTECH MC-3500 OR APPROVED EQUAL.
2. CHAMBERS SHALL BE MADE FROM VIRGIN, IMPACT-MODIFIED POLYPROPYLENE COPOLYMERS.
3. CHAMBER ROWS SHALL PROVIDE CONTINUOUS, UNOBSTRUCTED INTERNAL SPACE WITH NO INTERNAL SUPPORT PANELS THAT WOULD IMPEDE FLOW.
4. THE STRUCTURAL DESIGN OF THE CHAMBERS, THE STRUCTURAL BACKFILL AND THE INSTALLATION REQUIREMENTS SHALL ENSURE THAT THE LOAD FACTORS SPECIFIED IN THE AASHTO LRFD BRIDGE DESIGN SPECIFICATIONS, SECTION 12.12 ARE MET FOR: 1) LONG-DURATION DEAD LOADS AND 2) SHORT-DURATION LIVE LOADS, BASED ON THE AASHTO DESIGN TRUCK WITH CONSIDERATION FOR IMPACT AND MULTIPLE VEHICLE PRESENCES.
5. ONLY CHAMBERS THAT ARE APPROVED BY THE ENGINEER WILL BE ALLOWED. THE CONTRACTOR SHALL SUBMIT (3 SETS) OF THE FOLLOWING TO THE ENGINEER FOR APPROVAL BEFORE DELIVERING CHAMBERS TO THE PROJECT SITE:
   - A STRUCTURAL EVALUATION BY A REGISTERED STRUCTURAL ENGINEER THAT DEMONSTRATES THAT THE LOAD FACTORS SPECIFIED IN THE AASHTO LRFD BRIDGE DESIGN SPECIFICATIONS, SECTION 12.12 ARE MET.
   - STRUCTURAL CROSS SECTION DETAIL ON WHICH THE STRUCTURAL CROSS SECTION IS BASED.
6. THE INSTALLATION OF CHAMBERS SHALL BE IN ACCORDANCE WITH THE MANUFACTURER'S LATEST INSTALLATION INSTRUCTIONS.

StormTech

75 NAMOS ROAD, BLDG 1 - POOLER, GA 31322
800-821-6710 | 912.912.0194 | WWW.STORMTECH.COM

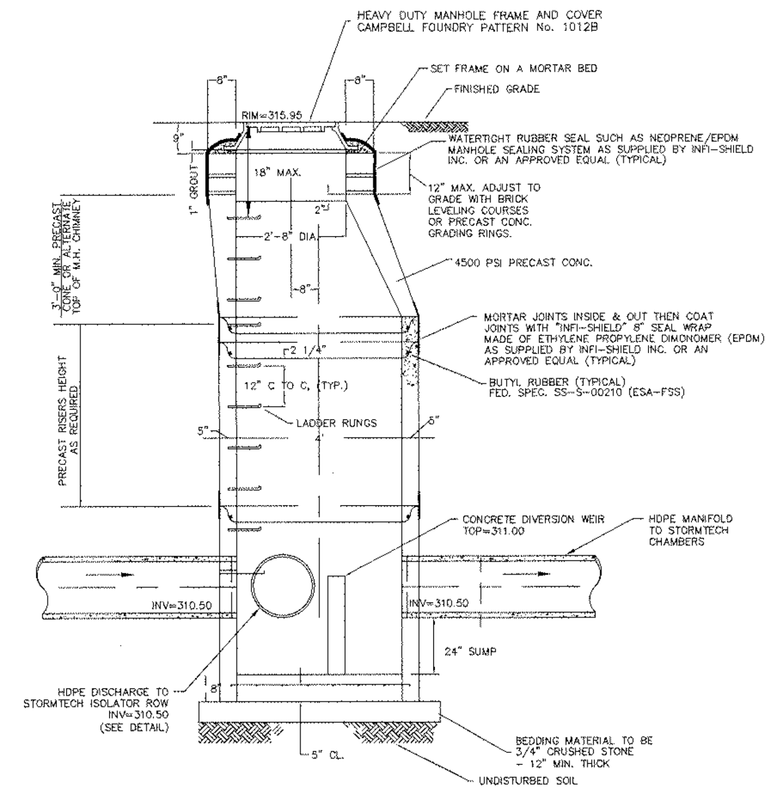

DIVERSION DRAINAGE MANHOLE DETAIL

N.T.S.

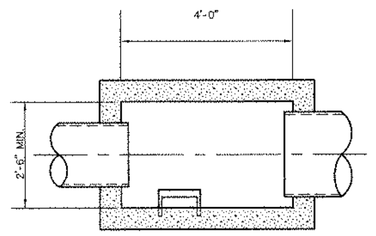

PLAN

NOTES:
1. ALL BASINS TO BE PRECAST CONCRETE DESIGNED FOR H-20 HIGHWAY LOADING PLUS 25% IMPACT.
2. ALL COMPONENTS TO CONFORM TO NYSDOT SPECS, LATEST EDITION.
3. ALL DRAINAGE PIPES TO BE HDPE UNLESS NOTED OTHERWISE ON PLANS OR DETAILS

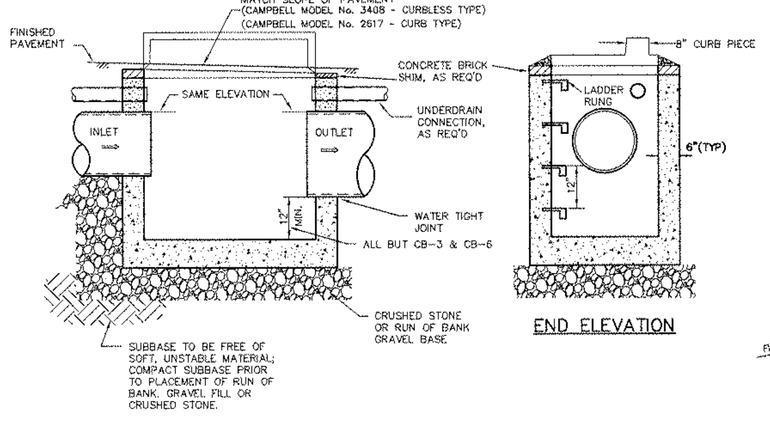

FRONT ELEVATION

END ELEVATION

STANDARD CATCH BASIN DETAILS

N.T.S

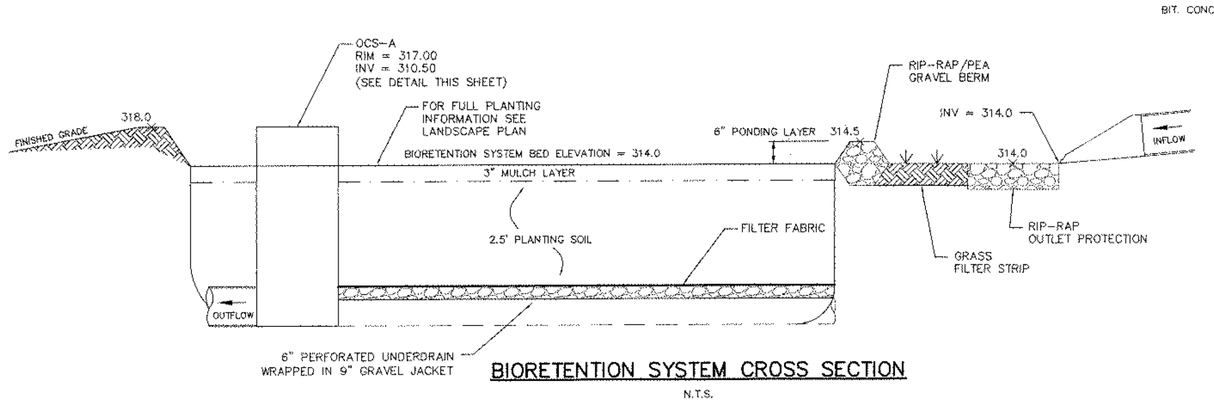

BIORETENTION SYSTEM CROSS SECTION

N.T.S.

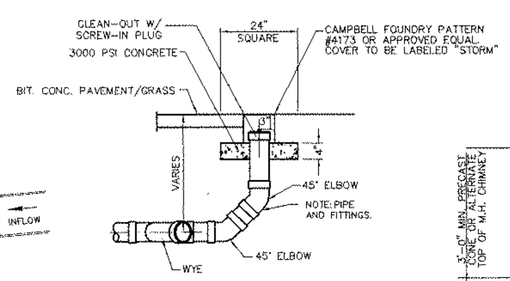

ROOF LEADER CLEANOUT AT BEND

N.T.S.

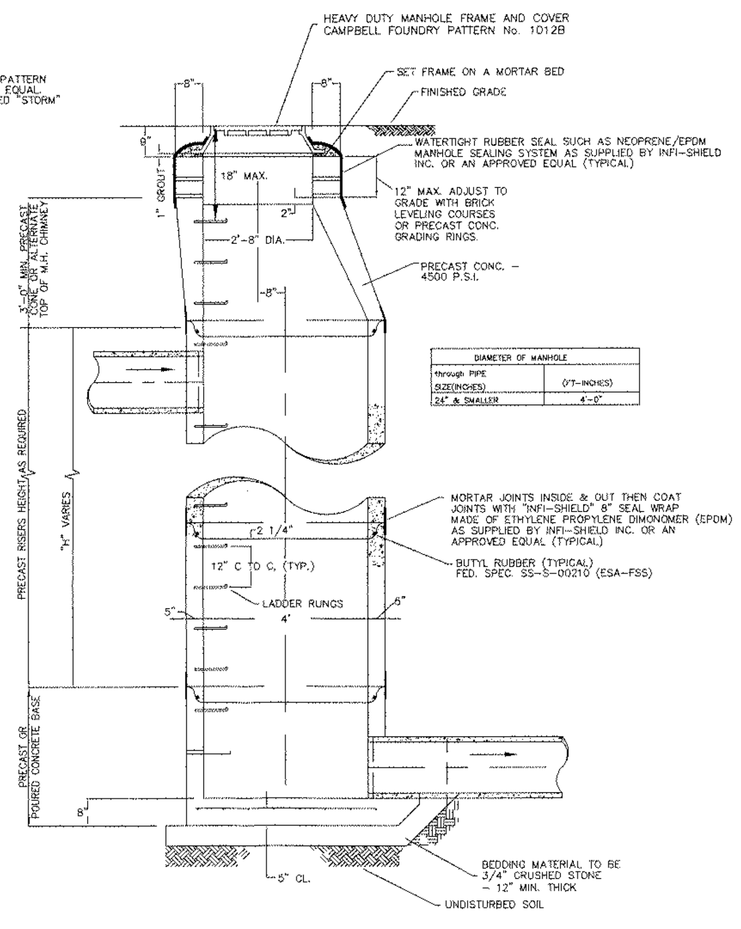

DIAMETER OF MANHOLE	
through PIPE SIZE(INCHES)	(7'-INCHES)
24" & SMALLER	4'-0"

PRECAST STORM DRAIN MANHOLE SECTION

N.T.S.

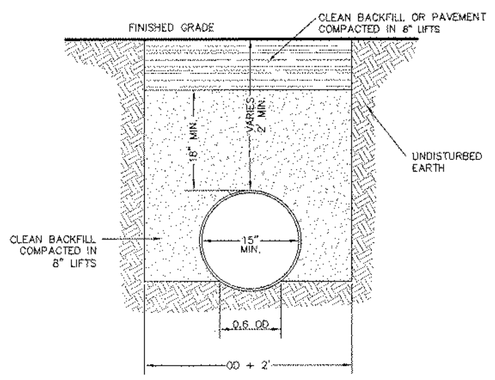

NOTES:

1. ALL FILL BELOW IMPERVIOUS AREAS SHALL BE WITH SELECT GRANULAR SUBGRADE NYSDOT ITEM 203.20 FOR THE FULL DEPTH OF THE EXCAVATION. BACKFILL SHALL BE PLACED IN 8" MAXIMUM LIFTS AND COMPACTED TO 95% OF MAXIMUM DRY DENSITY AS DETERMINED BY MODIFIED PROCTOR TEST.
2. EXCAVATIONS IN EXISTING PAVED ROADWAYS SHALL BE COORDINATED WITH THE MUNICIPAL ENGINEER.
3. ALL EXCAVATION AND TRENCHING TO MEET OSHA REQUIREMENTS.

STORM DRAIN TRENCH & BEDDING

N.T.S.

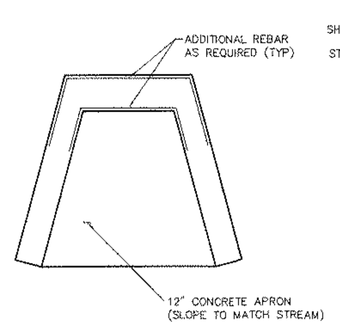

PLAN VIEW

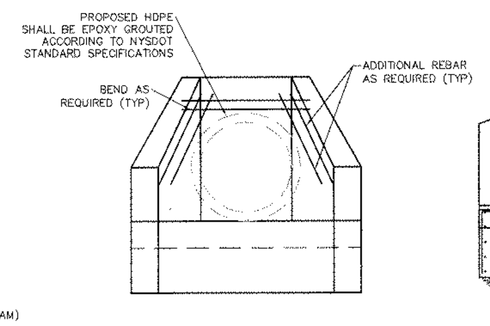

FRONT VIEW

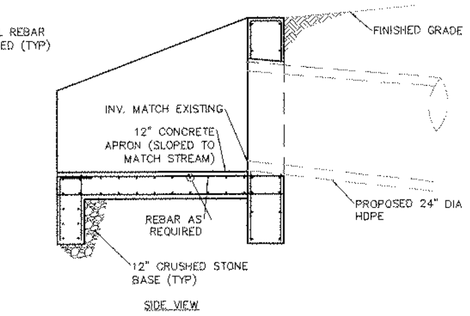

SIDE VIEW

PROVIDE SHOP DRAWINGS PRIOR TO FABRICATION

HEADWALL DETAIL

N.T.S.

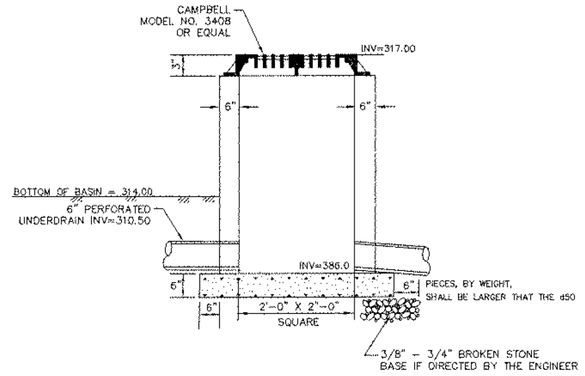

'BIO-A' OUTLET CONTROL STRUCTURE

N.T.S.

Rev.	DATE	DRAWN BY	DESCRIPTION

UNAUTHORIZED ALTERATION TO A MAP BEARING A LICENSED PROFESSIONAL ENGINEER'S SEAL IS A VIOLATION OF SECTION 7209, SUB-DIVISION 2, OF THE NEW YORK STATE EDUCATION LAW. THE CERTIFICATION IS NOT AN EXPRESS OR IMPLIED WARRANTY OR GUARANTEE. IT IS PURELY A STATEMENT OF PROFESSIONAL OPINION BASED ON KNOWLEDGE, INFORMATION AND BELIEF, BASED ON THE SOURCES AND EXTENT OF INQUIRY AND EVIDENCE AVAILABLE. THE CERTIFICATIONS ARE NOT TRANSFERABLE TO ADDITIONS OR SUBSEQUENT OWNERS OF THE PROPERTY.

STATE OF NEW YORK
ANDREW S. PETERSTON
NEW YORK LICENSED PROFESSIONAL ENGINEER
NEW YORK LICENSE NO. 075905

MASER CONSULTING P.A.

Consulting, Municipal & Environmental Engineers
Planners • Surveyors • Landscape Architects
State of N.Y. Certificate of Authorization: 0000172

New Jersey New York Pennsylvania Virginia
Customer Loyalty through Client Satisfaction

COPYRIGHT © 2014, MASER CONSULTING P.A
ALL RIGHTS RESERVED
THIS DRAWING AND ALL THE INFORMATION CONTAINED HEREON IS AUTHORIZED FOR USE ONLY BY THE PARTY FOR WHOM THE WORK WAS CONTRACTED OR TO WHOM IT IS CERTIFIED. THIS DRAWING MAY NOT BE COPIED, REUSED, DISCLOSED, DISTRIBUTED OR RELIED UPON FOR ANY OTHER PURPOSE WITHOUT THE EXPRESS WRITTEN CONSENT OF MASER CONSULTING, P.A.

NEWBURGH OFFICE
1607 Route 300
Suite 101
Newburgh, NY 12550
Phone: 845.564.4495
Fax: 845.564.0278
email: solutions @ maserconsulting.com

HUDSON VALLEY PERSONNEL SUPPORT CENTER OF JEHOVAH'S WITNESSES

CONSTRUCTION DETAILS

FOR

WATCHTOWER BIBLE & TRACT SOCIETY OF NEW YORK, INC.

TAX LOTS 97-2-30.1, 30.22 & 33

TOWN OF NEWBURGH ORANGE COUNTY N.Y.

SCALE:	DATE:	DRAWN BY:	CHECKED BY:
AS NOTED	11/21/14	CSS	ABF

PROJECT NUMBER: 13000398C

SHEET NUMBER: 9 of 9